Description

The WPE0521PZ is designed to protect voltage sensitive components from ESD. Excellent clamping capability, low leakage, and fast response time provide best in class protection on designs that are exposed to ESD. Because of its small size, it is suited for use in cellular phones, MP3 players, digital cameras and many other portable applications where board space comes at a premium.
It has been specifically designed to protect sensitive components which are connected to data and transmission lines from overvoltage caused by ESD(electrostatic discharge), and EFT (electrical fast transients).

Features

- Ultra small package: 1.0x0.6x0.5mm
- Protects one data or power line
- Ultra low leakage: nA level
- Working voltage: 5V
- Low clamping voltage
- 2-pin leadless package
- Complies with following standards:
  – IEC 61000-4-2 (ESD) immunity test
    Air discharge: ±30kV
    Contact discharge: ±30kV
  – IEC61000-4-5(Surge) 8A (8/20us)
- RoHS Compliant

Dimensions & Symbol（Unit: mm Max）

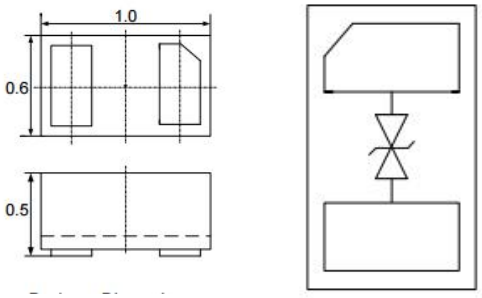

Mechanical Characteristics

- Package: DFN1006-2L (1.0×0.6×0.5mm)
- Lead Finish: NiPdAu
- Case Material: “Green” Molding Compound.
- Moisture Sensitivity: Level 3 per J-STD-020
- Terminal Connections: See Diagram Below
- Marking Information: See Below

Applications

- Data Line: USB1.0 &VGA
- Serial and Parallel Ports
- Notebooks and Handhelds
- Cellular handsets and accesssories
- Protable instrumentation
- Peripherals

Marking information

PB

Details marking code reference specification of approval list

Ordering Information

Part Number	Packaging	Reel Size
WPE0521PZ	10000/Tape & Reel	7 inch

WPMtek

Absolute maximum ratings (T_A=25ºC, RH=45%-75%, unless otherwise noted)

Parameter	Symbol	Value	Unit
Peak Pulse Power(tp=8/20uS waveform)	P_{PP}	100	W
Peak Pulse Current(tp=8/20uS waveform)	I_{PP}	8	A
ESD per IEC 61000−4−2 (Air) ESD per IEC 61000−4−2 (Contact)	V_{ESD}	±30 ±30	kV
Operating Temperature Range	T_J	−55 to +125	°C
Storage Temperature Range	Tstg	−55 to +150	°C

Electrical characteristics (T_A=25℃)

Parameter	Symbol	Min	Typ	Max	Unit	Test Condition
Reverse Working Voltage	V_{RWM}			5.0	V	
Breakdown Voltage	V_{BR}	6			V	I_T = 1mA
Reverse Leakage Current	I_R			0.2	μA	V_{RWM} = 5.0V
Clamping Voltage	V_C		7	8	V	I_{PP} = 1A (8 x 20μs pulse)
Clamping Voltage	V_C		10	12	V	I_{PP} = 8A (8 x 20μs pulse)
Junction Capacitance	C_J		15	18	pF	VR = 0V, f = 1MHz

WPMtek

Typical Performance Characteristics (T_A=25°C unless otherwise Specified)

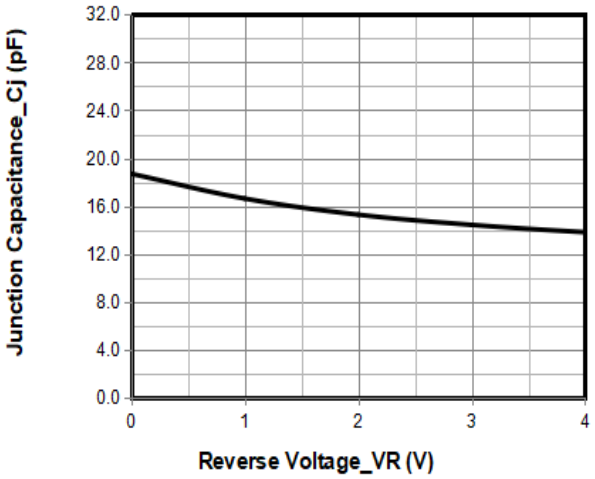

Junction Capacitance vs. Reverse Voltage

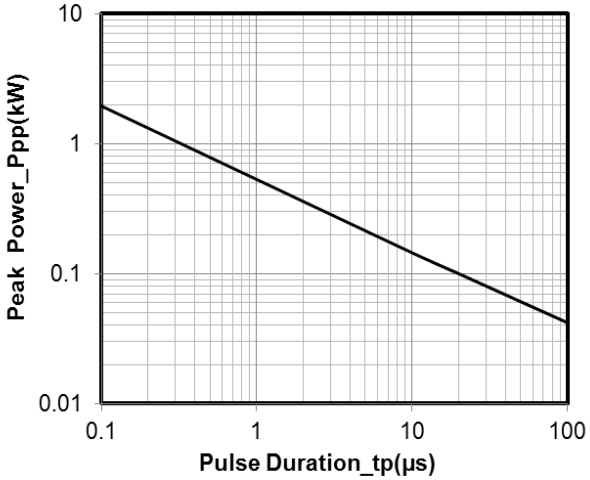

Peak Pulse Power vs. Pulse Time

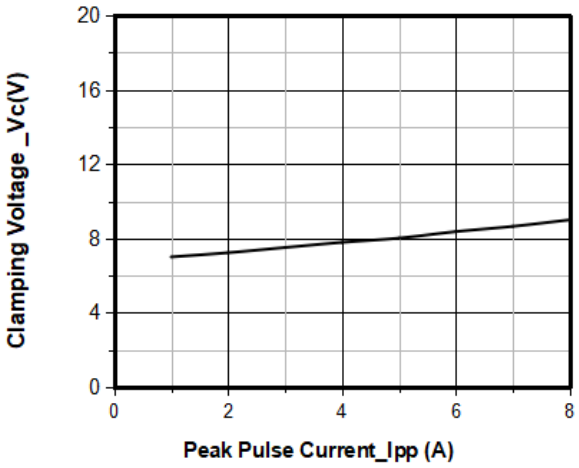

Clamping Voltage vs. Peak Pulse Current (tp = 8/20μs)

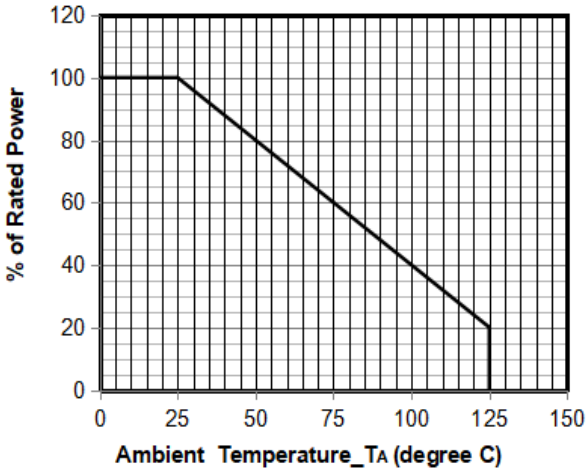

Power Derating Curve

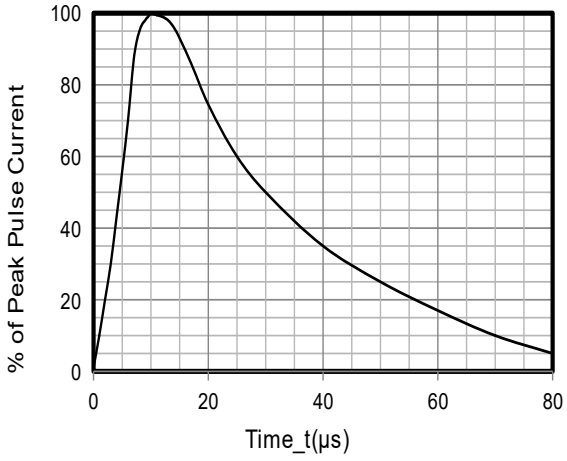

8 X 20μs Pulse Waveform

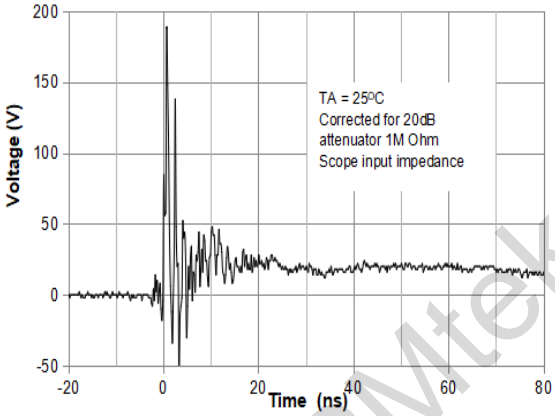

ESD Clamping Voltage

8 kV Contact per IEC61000−4−2

WPMtek

Soldering parameters

Reflow Condition		Pb-Free assembly (see FIG.2)
Pre Heat	-Temperature Min ($T_{s(min)}$)	+150℃
	-Temperature Max($T_{s(max)}$)	+200℃
	-Time (Min to Max) (ts)	60-180 secs.
Average ramp up rate (Liquid us Temp (T_L) to peak)		3℃/sec. Max
$T_{s(max)}$ to T_L - Ramp-up Rate		3℃/sec. Max
Reflow	-Temperature(T_L) (Liquid us)	+217℃
	-Temperature(t_L)	60-150 secs.
Peak Temp (T_p)		+260(+0/-5)℃
Time within 5℃ of actual Peak Temp (t_p)		30 secs. Max
Ramp-down Rate		6℃/sec. Max
Time 25℃ to Peak Temp (T_P)		8 min. Max
Do not exceed		+260℃

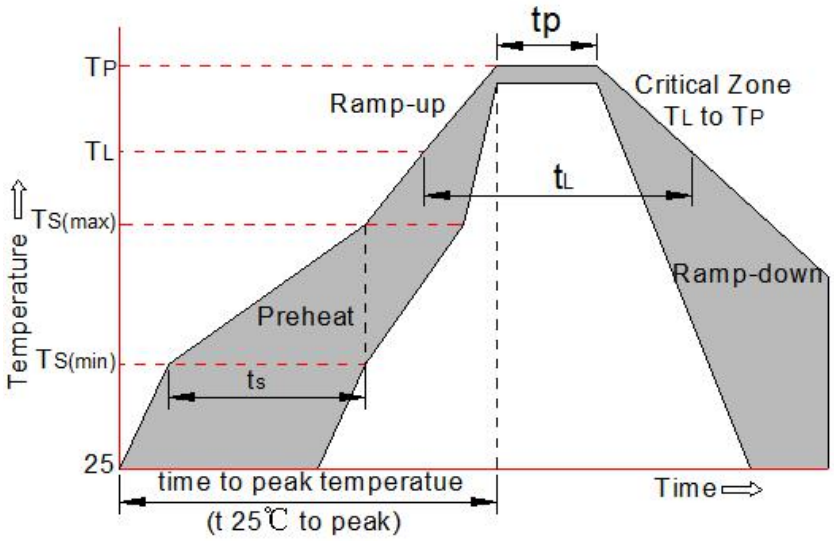

WPMtek

Package mechanical data

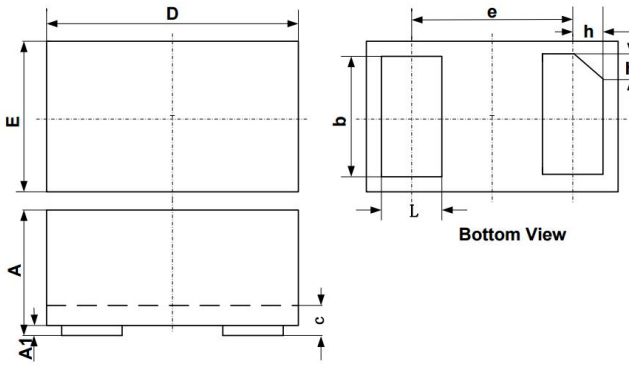

SYM	DIMENSIONS					
	MILLIMETERS			INCHES		
	MIN	NOM	MAX	MIN	NOM	MAX
A	0.45	0.50	0.55	0.018	0.020	0.022
A1	0.00	0.02	0.05	0.000	0.001	0.002
b	0.45	0.50	0.55	0.018	0.020	0.022
c	0.12	0.15	0.18	0.005	0.006	0.007
D	0.95	1.00	1.05	0.037	0.039	0.041
e	0.65 BSC			0.026 BSC		
E	0.55	0.60	0.65	0.022	0.024	0.026
L	0.20	0.25	0.30	0.008	0.010	0.012
h	0.07	0.12	0.17	0.003	0.005	0.007

Suggested Land Pattern

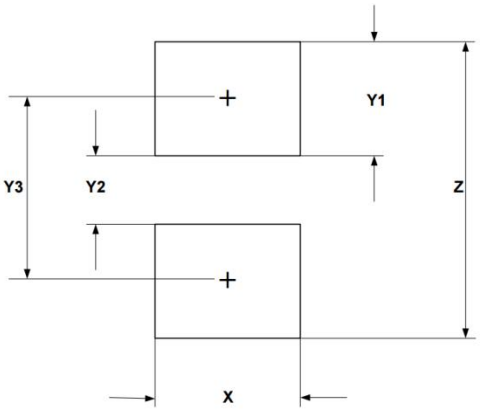

SYM	DIMENSIONS	
	MILLIMETERS	INCHES
X	0.60	0.024
Y1	0.50	0.020
Y2	0.30	0.012
Y3	0.80	0.032
Z	1.30	0.052

WPMtek reserves the right to make changes to the product specification and data in this document without notice. WPMtek makes no warranty, representation or guarantee regarding the suitability of its products for any particu lar purpose, nor does WPMtek assume any liability arising from the application or use of any products or circuits, and specifically disclaims any and all liability, including without limitation special, consequential or incidental damages.Any enquiry ,please write to sales@wpmtek.com for futher information.