

钍地半导体
Tudi Semiconductor

Product Specification

TUDI-NC7SB3157/ FSA3157

Low-Voltage SPDT Analog Switch or 2:1Multiplexer/ De-multiplexer Bus Switch

网址 www.sztdbdt.com

用芯智造·卓越品质

semiconductor device manufacturer

- Design
- research and development
- production
- and sales

Features

- Useful in Both Analog and Digital Applications
- Space-Saving,SC70 6-Lead Surface Mount Package
- Ultra-Small,MicroPak™ Leadless Package
- Low On Resistance:<10Ω on Typical at 3.3V V_{CC}
- Broad V_{CC} Operating Range:1.65V to 5.5V
- Rail-to-Rail Signal Handling
- Power-Down,High-Impedance Control Input
- Over-Voltage Tolerance of Control Input to 7.0V
- Break-Before-Make Enable Circuitry
- 250MHz,3dB Bandwidth

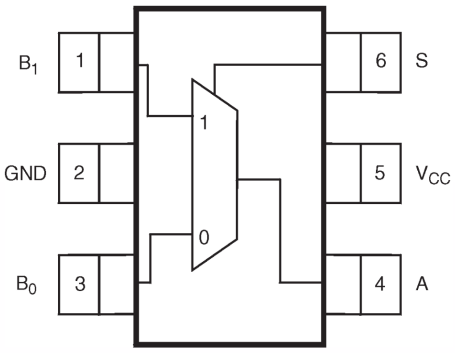

SC70-6

Description

The NC7SB3157/FSA3157 is a high-performance,sin-gle-pole /double-throw(SPDT)analog switch or 2:1 mul-tiplexer/de-multiplexer bus switch.
The device is fabricated with advanced sub-micron CMOS technology to achieve high-speed enable and disable times and low on resistance.The break-before-make select circuitry prevents disruption of signals on the B Port due to both switches temporarily being enabled during selectpin switching.The device is speci-fied to operate over the 1.65 to 5.5V V_{CC} operating range. The control input tolerates voltages up to 5.5V,independent of the V_{CC} operating range.

Logic Symbol

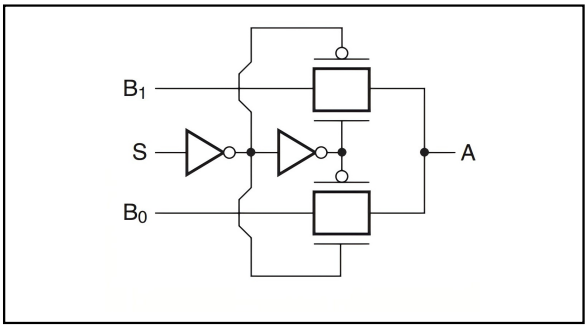

Figure 1.Logic Symbol

Analog Symbol

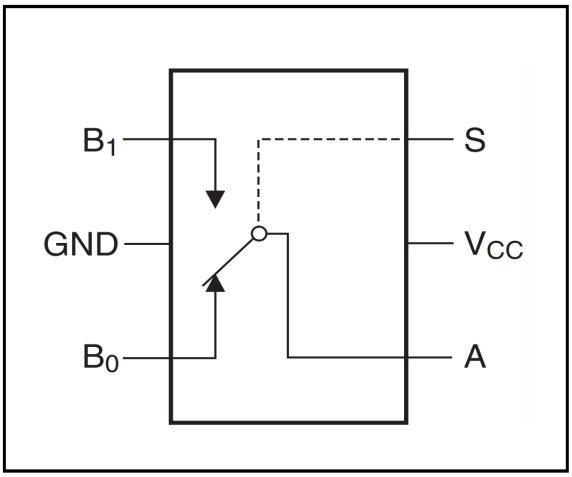

Figure 2.Analog Symbol

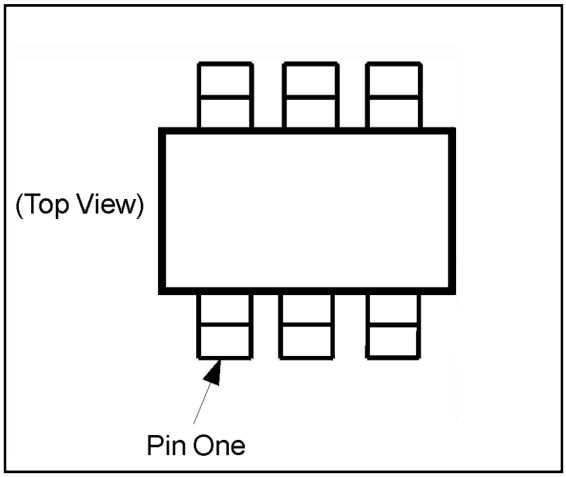

Figure 3. Pin One Orientation

Function Table

Input (S)	Function
Logic Level Low	B_0 Connected to A
Logic Level High	B_1Connected to A

Note:Orientation of top mark determines pin one location.Read the top product code mark left to right and pin one is the lower left pin (see Figure 3).

Pin Descriptions

Pin Names	Description
A,B_0,B_1	Data Ports
S	Control Input

Absolute Maximum Ratings

Stresses exceeding the absolute maximum ratings may damage the device. The device may not function or be opera-ble above the recommended operating conditions and stressing the parts to these levels is not recommended. In addi-tion, extended exposure to stresses above the recommended operating conditions may affect device reliability. The absolute maximum ratings are stress ratings only.

Symbol	Parameter	Min.	Max.	Unit
V_{CC}	Supply Voltage	-0.5	+7.0	V
V_S	DC Switch Voltage(1)	-0.5	V_{CC}+0.5	V
V_{IN}	DC Input Voltage(1)	-0.5	+7.0	V
I_{IK}	DC Input Diode Current at V_{IN}<0V		-50	mA
I_{OUT}	DC Output Current		128	mA
I_{CC}/I_{GND}	DC V_{CC} or Ground Current		±100	mA
T_{STG}	Storage Temperature Range	-65	+150	℃
T_J	Junction Temperature Under Bias		+150	℃
T_L	Junction Lead Temperature (Soldering,10 seconds)		+260	℃
MSL	Moisture Sensitivity Level(JEDEC J-STD-020A)		1	Level
P_D	Power Dissipation at+85℃		180	mW
ESD	Human Body Model,JESD22-A114		4000	V

Note:1. The input and output negative voltage ratings may be exceeded if the input and output diode current ratings areobserved.

Recommended Operating Conditions

The Recommended Operating Conditions table defines the conditions for actual device operation. Recommended operating conditions are specified to ensure optimal performance to the datasheet specifications. Fairchild does not recommend exceeding them or designing to absolute maximum ratings.

Symbol	Parameter		Min.	Max.	Unit
V_{CC}	Supply Voltage Operating		1.65	5.50	V
V_{IN}	Control Input Voltage(2)		0	V_{CC}	V
V_{IN}	Switch Input Voltage(2)		0	V_{CC}	V
V_{OUT}	Output Voltage(2)		0	V_{CC}	V
T_A	Operating Temperature		-40	+85	℃
t_r,t_f	Input Rise and Fall Time	Control Input V_{CC}=2.3V-3.6V	0	10	ns/V
		Control Input V_{CC}=4.5V-5.5V	0	5	ns/V
θ_{JA}	Thermal Resistance,SC70			270	℃/W

Note:2. Control input must be held HIGH or LOW; it must not float.

DC Electrical Characteristics

Symbol	Parameter	Conditions	Vcc(V)	TA=+25℃			TA=-40℃ to+85 ℃		Units
				Min.	Typ.	Max.	Min.	Max.	
V_{IH}	High Level Input Voltage		1.65-1.95	0.75V_{CC}			0.75 V_{CC}		V
			2.3-5.5	0.7 V_{CC}			0.7V_{CC}		
V_{IL}	Low Level Input Voltage		1.65-1.95			0.25V_{CC}		0.25 V_{CC}	V
			2.3-5.5			0.3 V_{CC}		0.3V_{CC}	
I_{IN}	Input Leakage Current	0≤V_{IN}≤5.5V	0-5.5		±0.05	± 0.1		±1	μA
I_{OFF}	Off State Leakage Current	0≤A,B≤Vcc	1.65-5.5		±0.05	± 0.1		±1	μA

DC Electrical Characteristics （Continued）

Symbol	Parameter	Conditions	Vcc(V)	T_A=+25℃			T_A=-40℃ to+85℃		Units
				Min.	Typ.	Max.	Min.	Max.	
R_{ON}	Switch On Resistance(3)	V_{IN}=0V,I_O=30mA	4.5		3.0	7.0		7.0	Ω
		V_{IN}=2.4V,I_O=-30mA			5.0	12.0		12.0	
		V_{IN}=4.5V,I_O=-30mA			7.0	15.0		15.0	
		V_{IN}=0V,I_O=24mA	3.0		4.0	9.0		9.0	
		V_{IN}=3V,I_O=-24mA			10.0	20.0		20.0	
		V_{IN}=0V,I_O=8mA	2.3		5.0	12.0		12.0	
		V_{IN}=2.3V,I_O=-8mA			13.0	30.0		30.0	
		V_{IN}=0V,I_O=4mA	1.65		6.5	20.0		20.0	
		V_{IN}=1.65V,I_O=-4mA			17.0	50.0		50.0	
I_{cc}	Quiescent Supply Current;All Channels On or Off	V_{IN}=V_{CC} or GND I_{OUT}=0	5.5			1		10	μA
	Analog Signal Range		Vcc	0		V_{CC}	0	Vcc	V
R_{RANGE}	On Resistance Over Signal Range(3,7)	I_A=-30mA,0≤V_{Bn}≤V_{CC}	4.5					25.0	Ω
		I_A=-24mA,0≤V_{Bn}≤V_{CC}	3.0					50.0	
		I_A=-8mA,0≤V_{Bn}≤V_{CC}	2.3					100	
		I_A=-4mA,0≤V_{Bn}≤V_{CC}	1.65					300	
△R_{ON}	On Resistance Match Between-Channels(3,4,5)	I_A=-30mA,V_{Bn}=3.15	4.5		0.15				Ω
		I_A=-24mA,V_{Bn}2.1	3.0		0.2				
		I_A=-8mA,V_{Bn}=1.6	2.3		0.5				
		I_A=-4mA,V_{Bn}=1.15	1.65		0.50				

Symbol	Parameter	Conditions	V_{CC}(V)	T_A=+25℃			T_A=-40℃ to+85℃		Units
				Min.	Typ.	Max.	Min.	Max.	
R_{flat}	On Resistance Flatness(3,4,6)	I_A=-30mA,0≤V_{Bn}≤V_{CC}	5.0		6.0				Ω
		I_A=-24mA,0≤V_{Bn}≤V_{CC}	3.3		12.0				
		I_A=-8mA,0≤V_{Bn}≤V_{CC}	2.5		28.0				
		I_A=-4mA,0≤V_{Bn}≤V_{CC}	1.8		125				

Notes:
3. Measured by the voltage drop between A and B pins at the indicated current through the switch. On resistance is determined by the lower of the voltages on the two(A or B Ports).
4. Parameter is characterized,but not tested in production.
5.△R_{ON}=R_{ON}max-R_{ON} minimum measuredat identical V_{CC},temperature,and voltage levels.
6. Flatness is defined as the difference between the maximum and minimum value of on resistance over the specified range of conditions.
7. Guaranteed by design.

AC Electrical Characteristics

Symbol	Parameter	Conditions	V_{CC}(V)	T_A=+25℃			T_A=-40℃ to+85℃		Units	Figure Number
				Min.	Typ.	Max.	Min.	Max.		
t_{PHL},t_{PLH}	Propagation Delay Bus-to-Bus(8)	V_I= OPEN	1.65-1.95			3.5		3.5	ns	Figure 5 Figure 6
			2.3-2.7			1.2		1.2		
			3.0-3.6			0.8		0.8		
			4.5-5.5			0.3		0.3		
t_{PZL},t_{PZH}	Output Enable Time Turn-On Time(A to B_n)	V_I=2×V_{CC} for t_{PZL} V_I=0V for t_{PZH}	1.65-1.95	7.0		23.0	7.0	24.0	ns	Figure 5 Figure 6
			2.3-2.7	3.5		13.0	3.5	14.0		
			3.0-3.6	2.5		6.9	2.5	7.6		
			4.5-5.5	1.7		5.2	1.7	5.7		

Symbol	Parameter	Conditions	V_{CC}(V)	T_A=+25℃			T_A=-40℃ to+85℃		Units	Figure Number
				Min.	Typ.	Max.	Min.	Max.		
t_{PLZ},t_{PHZ}	Output Disable Time Turn-Off Time(A Port to B Port)	V_I=2×V_{CC} for t_{PLZ} V_I=0V for t_{PHZ}	1.65-1.95	3.0		12.5	3.0	13.0	ns	Figure 5 Figure 6
			2.3-2.7	2.0		7.0	2.0	7.5		
			3.0-3.6	1.5		5.0	1.5	5.3		
			4.5-5.5	0.8		3.5	0.8	3.8		
t_{B-M}	Break-Before-MakeTime(9)		1.65-1.95	0.5			0.5		ns	Figure7
			2.3-2.7	0.5			0.5			
			3.0-3.6	0.5			0.5			
			4.5-5.5	0.5			0.5			
Q	Charge Injection(9)	C_L=0.1nF, V_{GEN}=0V,	5.0		7.0				pC	Figure 8
		R_{GEN}=0Ω	3.3		3.0					
OIRR	Off Isolation (10)	R_L=50Ω, f=10MHz	1.65-5.5		-57.0				dB	Figure 9
Xtalk	Crosstalk	R_L=50Ω, f=10MHz	1.65-5.5		-54.0				dB	Figure10
BW	-3dB Bandwidth	RL=50Ω	1.65-5.5		250				MHz	Figure13
THD	Total Harmonic Distortion(9)	R_L=600Ω, 0.5 V_{PP} f=600 Hz to 20 KHz	5.0		.011				%	

Notes:

8. This parameter is guaranteed by design but not tested. The bus switch contributes no propagation delay other than the RC delay of the on resistance of the switch and the 50pF load capacitance, when driven by an ideal voltage source (zero output impedance).

9. Guaranteed by design.

10.Off Isolation=20 $\log_{10}[V_A/V_{Bn}]$.

Capacitance

T_A=+25°C,f=1MHz.Capacitive is characterized, but not tested in production.

Symbol	Parameter	Conditions	Typ.	Max.	Units	Figure Number
C_{IN}	Control Pin Input Capacitance	V_{CC}=0V	2.3		pF	
C_{IO-B}	B Port Off Capacitance	V_{CC}=5.0V	6.5		pF	Figure 11
C_{IOA-ON}	A Port Capacitance When Switch Is Enabled	V_{CC}=5.0V	18.5		pF	Figure 12

AC Loading and Waveforms

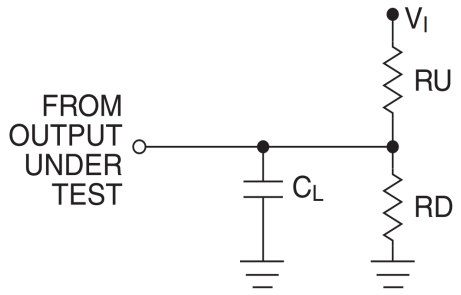

Notes:
Input driven by 50Ω source terminated in 50Ω
Cl includes load and stray capacitance
Input PRR = 1.0 Mhz; tw = 500 ns

Figure 5. AC Test Circuit

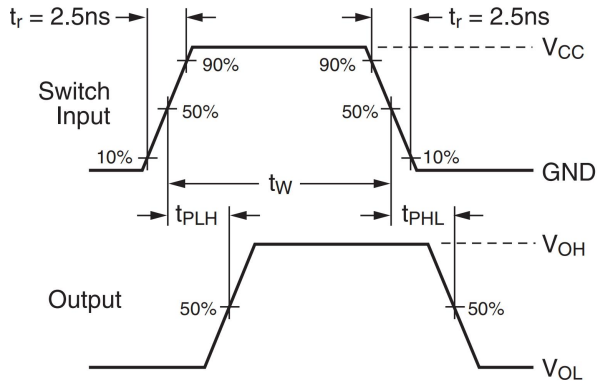

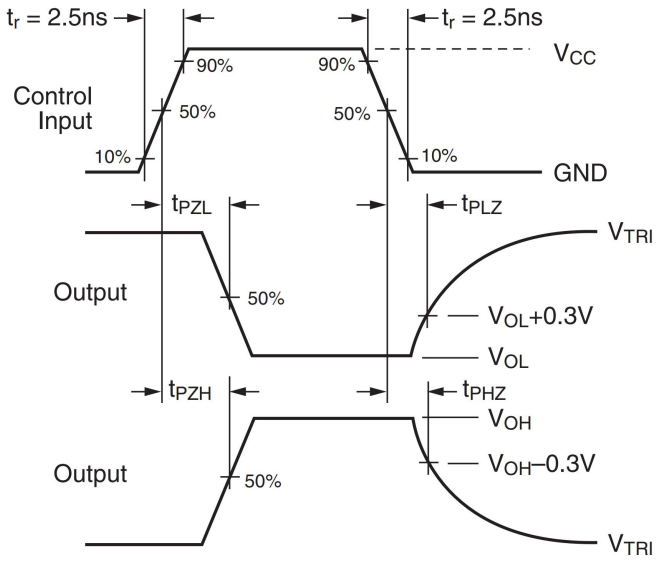

Figure 6.AC Waveforms

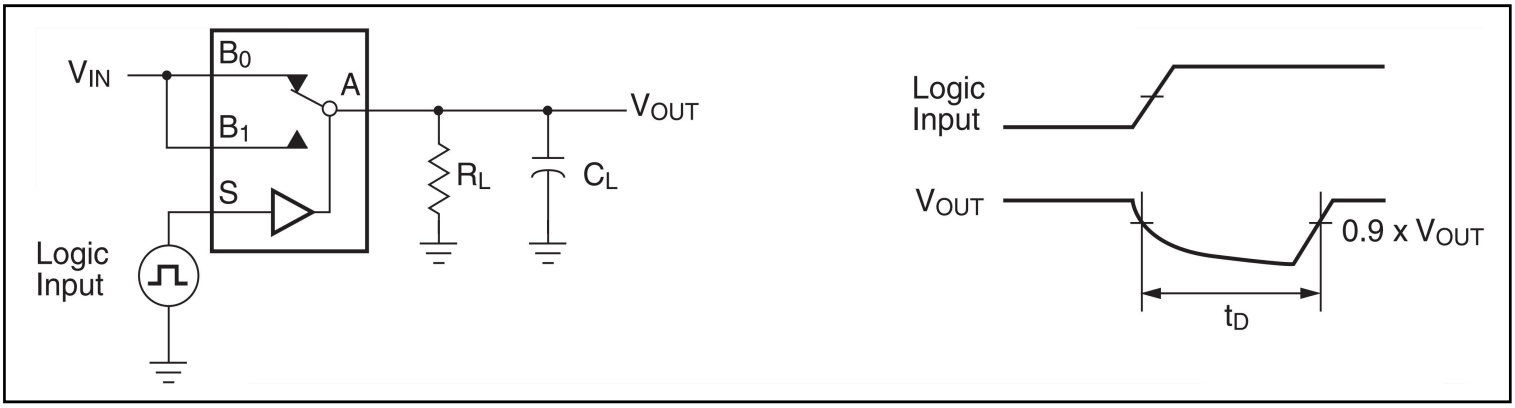

Figure 7. Break-Before-Make Interval Timing

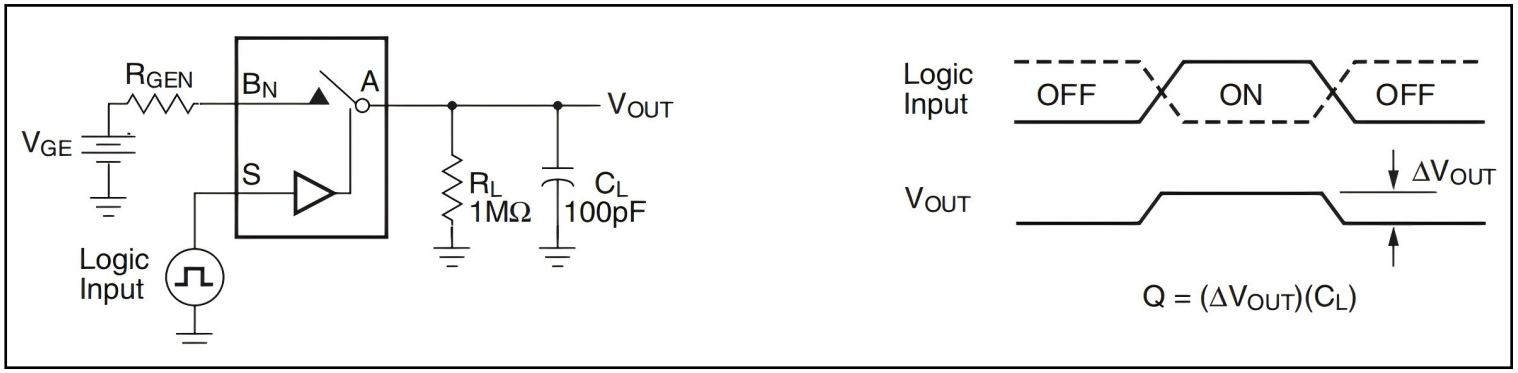

Figure 8.Charge Injection Test

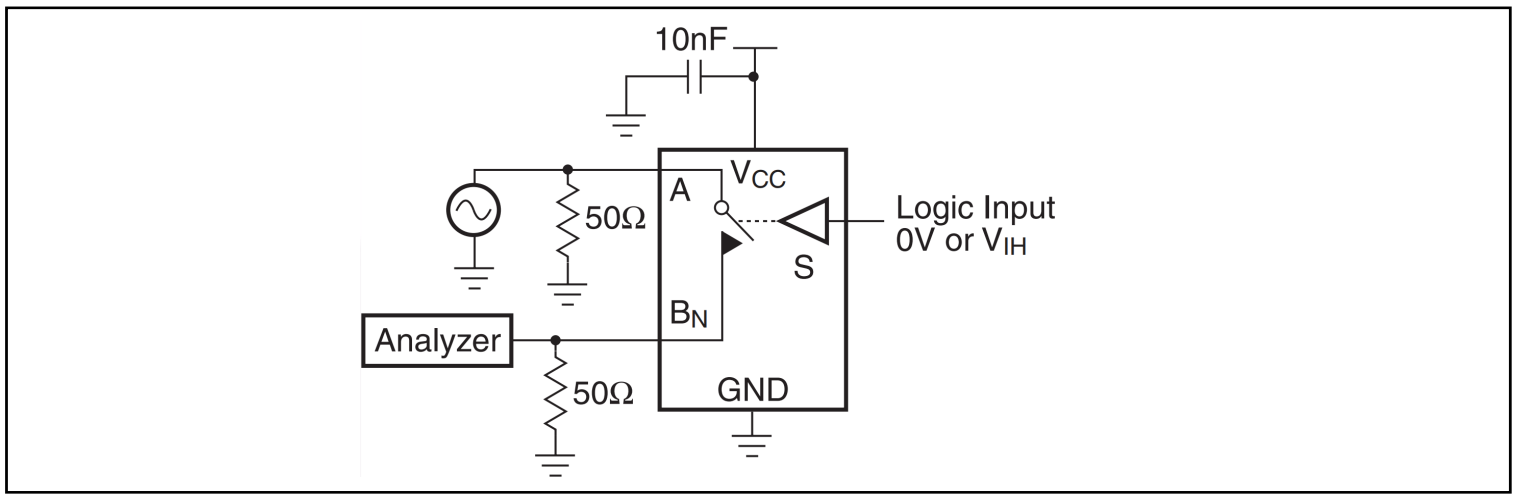

Figure 9.Off Isolation

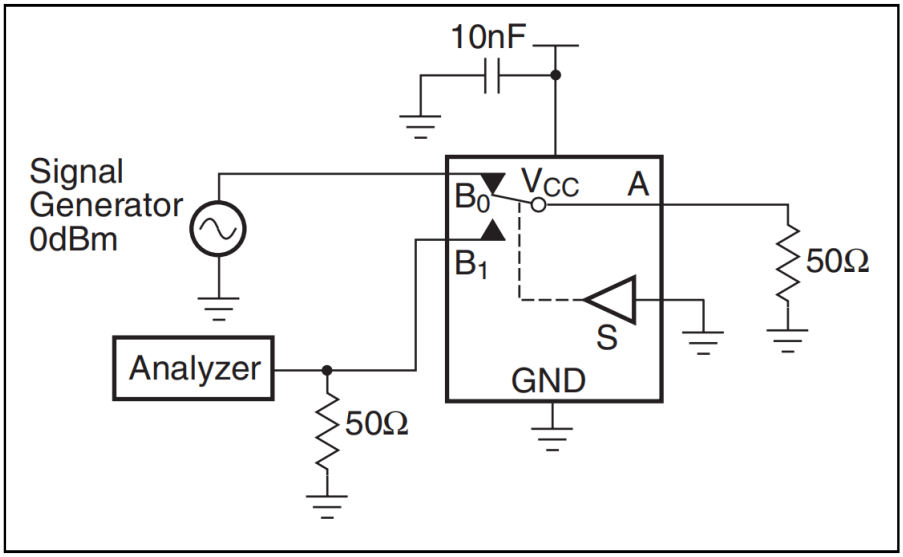

Figure 10.Crosstalk

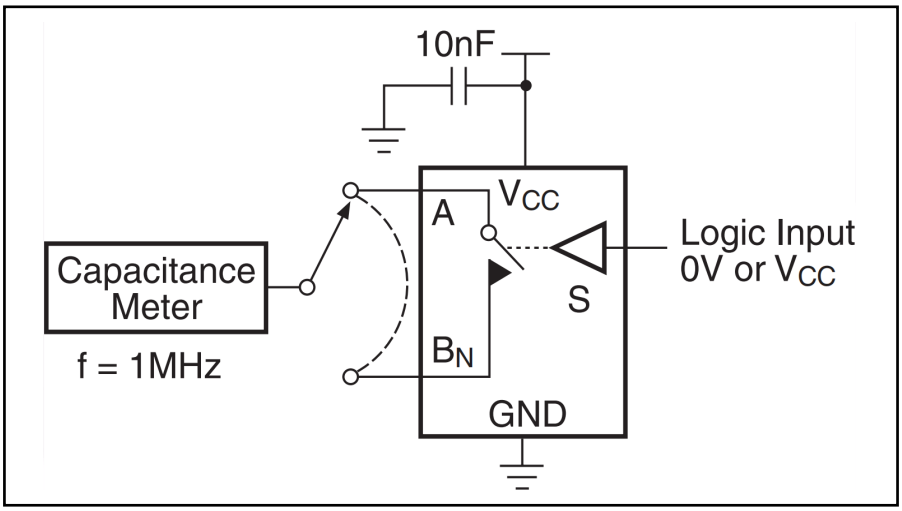

Figure 11.Channel Off Capacitance

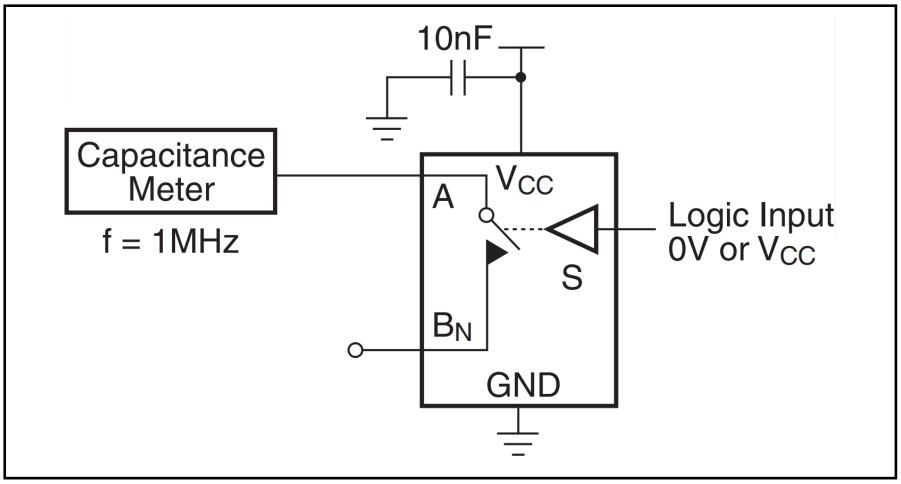

Figure 12. Channel On Capacitance

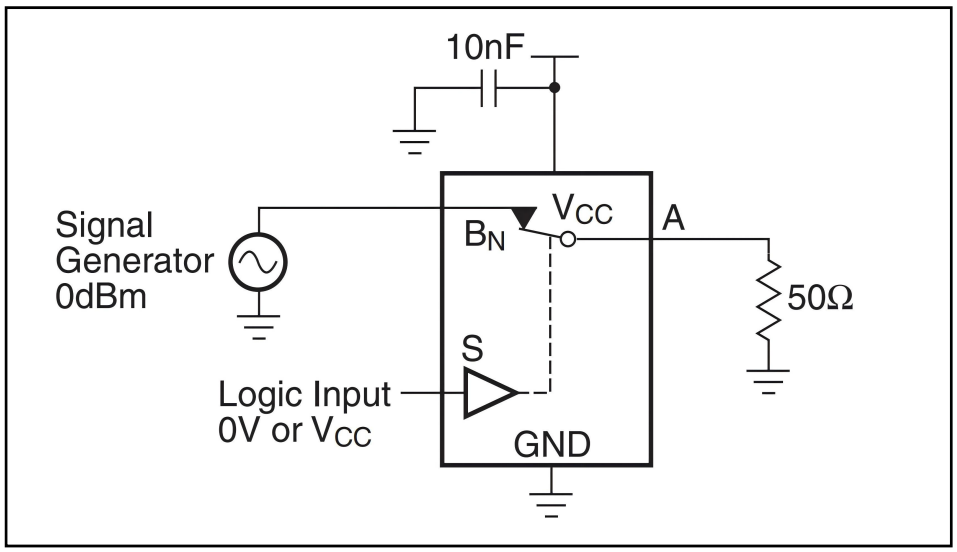

Figure 13.Bandwidth

Order information

Order Number	Package	Package Quantity	Marking On The park	Temperature
NC7SB3157P6X	SC70-6	Tape,Reel,3000	BB5X	−40°C to +85°C
FSA3157P6X	SC70-6		BB5R	

Revision history

	Date	Revision	Page
V1.0	2022/12	New	1-9
V1.1	2024/8	Update model and PDF template	1-16

Package SC70-6

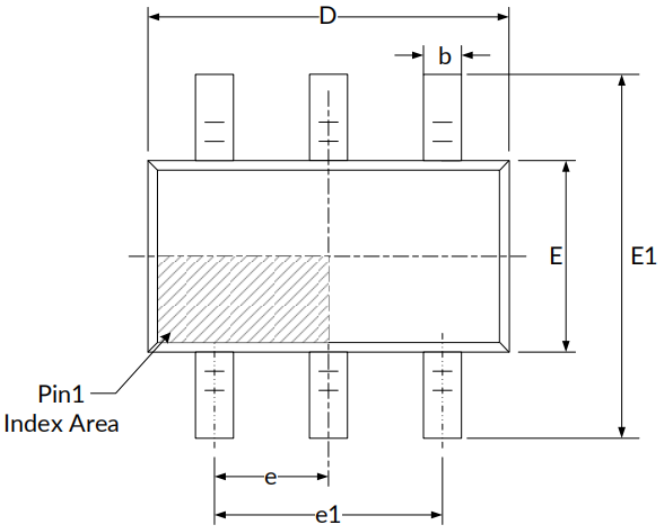

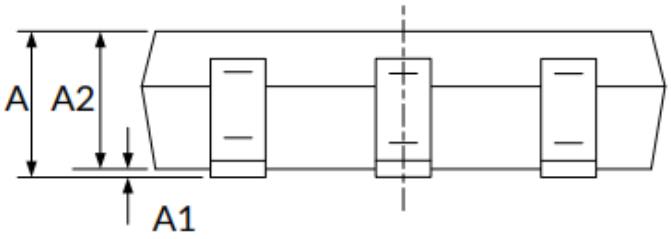

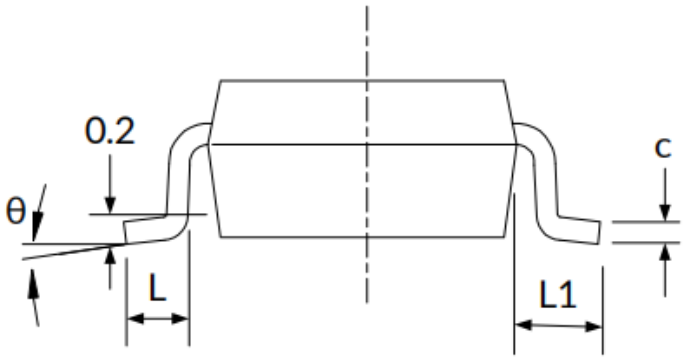

Symbol	DimensionsIn Millimeters		DimensionsIn Inches	
	Min	Max	Min	Max
A(1)	0.900	1.100	0.035	0.043
A1	0.000	0.100	0.000	0.004
A2	0.900	1.000	0.035	0.039
b	0.150	0.350	0.006	0.014
C	0.080	0.150	0.003	0.006
D(1)	2.000	2.200	0.079	0.087
E(1)	1.150	1.350	0.045	0.053
E1	2.150	2.450	0.085	0.096
e	0.650(BSC)(2)		0.026(BSC)(2)	
e1	1.300(BSC)(2)		0.051(BSC)(2)	
L	0.260	0.460	0.010	0.018
L1	0.525		0.021	
θ	0°	8°	0°	8°

Important statement:

●TUDI Semiconductor reserves the right to modify the product manual without prior notice! Before placing an order, customers need to confirm whether the obtained information is the latest version and verify the completeness of the relevant information.

●Any semi-guide product is subject to failure or malfunction under specified conditions. It is the buyer's responsibility to comply with safety standards when using TUDI Semiconductor products for system design and whole machine manufacturing.And take the appropriate safety measures to avoid the potential in the risk of loss of personal injury or loss of property situation!

●TUDI Semiconductor products have not been licensed for life support, military, and aerospace applications,and therefore TUDI Semiconductor is not responsible for any consequences arising from the use of this product in these areas.

●If any or all TUDI Semiconductor products (including technical data, services) described or contained in this document are subject to any applicable local export control laws and regulations, they may not be exported without an export license from the relevant authorities in accordance with such laws.

●The specifications of any and all TUDI Semiconductor products described or contained in this document specify the performance, characteristics, and functionality of said products in their standalone state, but do not guarantee the performance, characteristics, and functionality of said products installed in Customer's products or equipment. In order to verify symptoms and conditions that cannot be evaluated in a standalone device, the Customer should ultimately evaluate and test the device installed in the Customer's product device.

●TUDI Semiconductor documentation is only allowed to be copied without any alteration of the content and with the relevant authorization.TUDI Semiconductor assumes no responsibility or liability for altered documents.

●TUDI Semiconductor is committed to becoming the preferred semiconductor brand for customers, and TUDI Semiconductor will strive to provide customers with better performance and better quallity products.