深圳市强生光电科技有限公司

Shenzhen JNJ Optoelectronics Co.,Limited

产品规格书

SPECIFICATION FOR APPROVAL

产品料号 ITEM	**30100583**
产品型号 PART NO.	JNJ-LLJV0111B60/28mil/950-970nm
版本 REVISION	**A4**
制作日期 DATE	**2025/03/15**

业务部 SERVICES DEPT.	工程部 ENGINEER DEPT.	制作 PREPARED	审核 CHECKED	批准 APPROVED
段晓星	孔祥明	谭议	马新华	金谦

客户接收 CUSTOMER ACCEPTANCE：		
客户名称 CUSTOMER：		
担当 SIGNED：	审核 CHECKED：	批准 APPROVED：

JNJOPTO

地址：深圳市龙岗区横岗街道 228 工业区永发工业园 48 号 3C 厂区
Address:3C, No. 48, YongFa Industrial Park, 228 Industrial Zone, HengGang street,LongGang ShenZhen
电话(Tel)：0755-85236381
网站(Web site)：http://www.jnjopto.com

外观 Exterior：



图片仅供参考

产品构造 Product conformation：

- 封装胶水：无色透明硅胶
  Packaging glue: colorless transparent silica gel
- 封装支架：8080 2PIN 支架
  Packaging bracket: 8080 2PIN bracket
- 发光颜色：红外 波长 950nm 减红爆
  Luminous color: Infrared wavelength 950nm Red burst
- 发光角度：60 度
  Luminous Angle: 60 degree
- 静电敏感材质
  Electrostatic sensitive material



应用 Applications：

- 光纤通信、遥控装置 Optical fiber communication, remote control device
- 特殊照明、显示器背光 Special lighting, display and backlight
- 安防监控、夜视仪等 Security monitoring, night vision equipment, etc
- 线性发光灯具等 Linear luminescent lamps, etc

产品外形尺寸 Package outline dimensions：

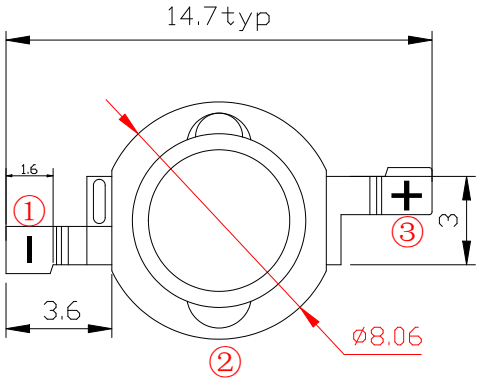

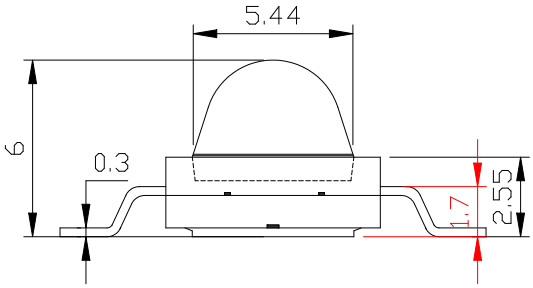

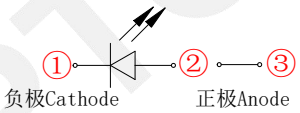

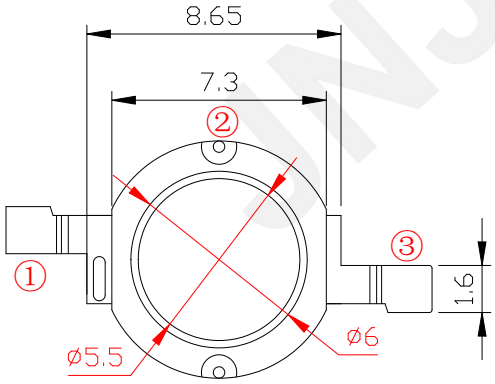

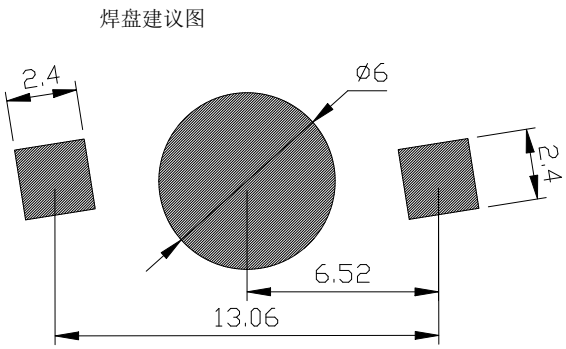

备注(Note)：

1. 标注尺寸单位为毫米
   Dimensions are in millimeters.
2. 除特别标注外，所有尺寸允许公差± 0.1mm .
   Tolerances unless mentioned are ± 0.1mm.

JNJOPTO

极限参数 Absolute Maximum Rating：

参数 Parameter	符号 Symbol	额定值 Rated Value	单位 Unit	环境温度 condition Temperature
最大持续工作电流 Max Continuous Working Current	IF	≤700	mA	Ta=25°C
最大脉冲工作电流*Max Pulse Current	IFP	2000	mA	Ta=25°C
反向电压 Reverse Voltage	VR	5	V	Ta=25°C
工作温度 Operating Temperature	Topr	-40℃to +100℃	°C	
存储温度 Storage Temperature	Tstg	-40℃to +100℃	°C	
回流焊温度 Reflow Soldering Temperature	Tsol	245℃for 10sec	°C	
结温 Junction Temperature	Tj	115	°C	

*Pulse condition : pulse width (tp) =100us, duty cycle=10%

光性能特点 Optical Characteristics：

芯片 Chip	参数 Parameter	符号 Symbol	测试条件 test condition	最小 Min	典型 Typ	最大 Max	单位 Unit
IR950	辐射功率 Radiant Power	Po	IF=350mA	---	230	---	mW
			IF=700mA	---	460	---	
	辐射强度 Radiant Intensity	Ie	IF=350mA	180	230	---	mW/Sr
			IF=700mA	400	480	---	
	正向电压 Forward Voltage	VF	IF=350mA	---	1.3	2.2	V
			IF=700mA	---	1.4	2.3	
	波长 Wavelength	λ	IF=350mA	---	950	---	nm
	半波宽 Half wave width	Δλ	IF=350mA	---	40	---	nm
	反向电流 Reverse current	IR	VR=5.0V	---	---	10	μA
视角 Viewing Angle		2θ1/2		---	60	---	Deg
抗静电 Electrostatic Discharge Threshold		ESD	Human Body Model	---	---	2000	V

备注(Note)：

1. θ1/2 是半值角，指辐射强度是光学中心线光强的 1/2 到光学中心线的角度
   Theta 1/2 is the half-value Angle, which refers to the Angle of radiation intensity from the optical center line to the optical center line, which is 1/2 of the light intensity of the optical center line
2. 上述辐射通量的测试允许公差是±10% ，电压测量误差±0.1v，波长测量误差±1nm
   The test of the above radiation flux allows a tolerance of ± 10%, voltage measurement error of ± 0.1v, and wavelength measurement error of ± 1nm
3. **使用时请用恒流驱动，恒压驱动时电流会偏差较大。**
   Please use constant current drive, and the current deviation of constant voltage drive will be large.

地址：深圳市龙岗区横岗街道 228 工业区永发工业园 48 号 3C 厂区
Address:3C, No. 48, YongFa Industrial Park, 228 Industrial Zone, HengGang street,LongGang ShenZhen
电话(Tel)：0755-85236381
网站(Web site)：http://www.jnjopto.com

LED 芯片特性曲线 Typical Electro-Optical Characteristics Curves：

Fig.1 – Relative Radiant Flux Intensity vs. Forward Current

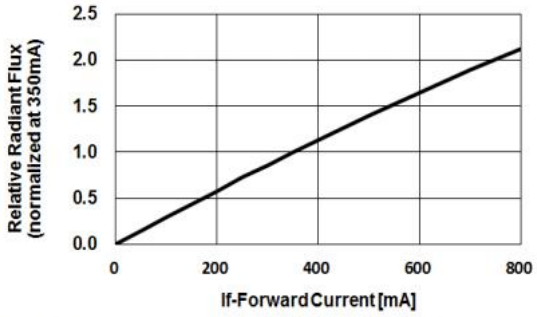

Fig.2 – Forward Current vs. Forward Voltage

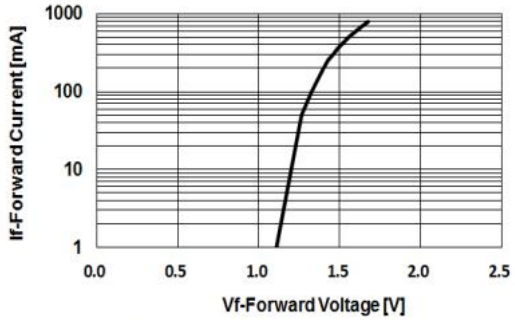

Fig.3 – Relative Radiant Flux (@350mA) vs. Ambient Temperature

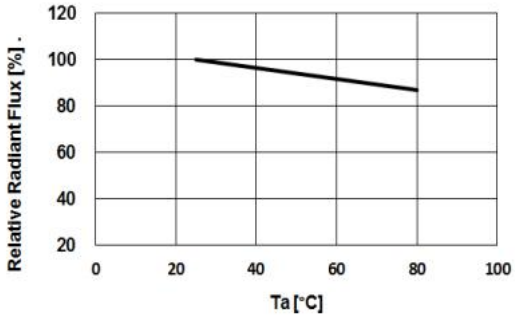

Fig.4 – Forward Voltage (@350mA) vs. Ambient Temperature

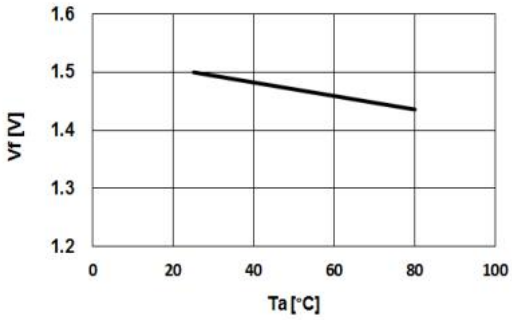

Fig.5 – Peak Wavelength (@350mA) vs. Ambient Temperature

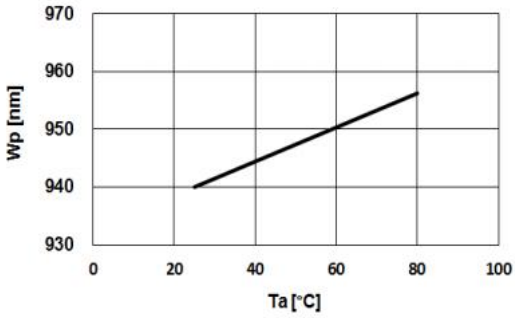

Fig.6 – Maximum Driving Forward DC Current vs. Ambient Temperature (De-rating based on Tj max. = 115°C)

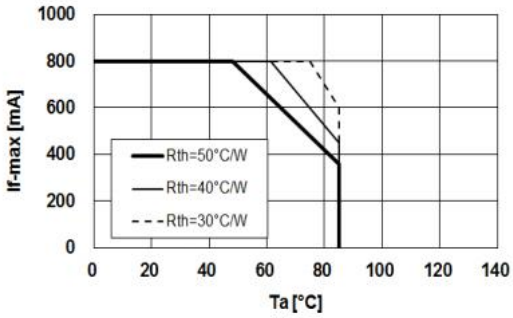

LED 光强分布曲线(350mA 测试) Intensity distribution curve (350mA test)：

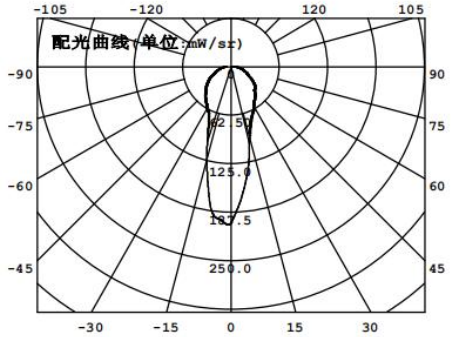

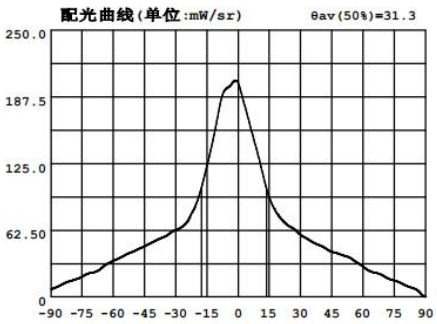

地址：深圳市龙岗区横岗街道 228 工业区永发工业园 48 号 3C 厂区
Address:3C, No. 48, YongFa Industrial Park, 228 Industrial Zone, HengGang street,LongGang ShenZhen
电话(Tel)：0755-85236381
网站(Web site)：http://www.jnjopto.com

信赖性测试项目及条件 Reliability Test：

测试项目 Test Parameter	参考标准 Reference Criterion	试验条件 Test Condition	数量 Quantity	接受/拒收 Ac/Re
回焊耐热性 Soldering resistance test	JESD22-B106	Ta=245℃，T=10±1sec，3 times Reflow	30Pcs	0/1
冷热冲击保存试验 Thermal shock storage test	JESD22-A106	Ta=-40℃~+100℃，T=(30min~30min)×100Cycles	20Pcs	0/1
高温保存试验 High temperature storage test	JESD22-A103	Ta=100℃，T=1000HR	20Pcs	0/1
低温保存试验 Low temperature storage test	JESD22-A119	Ta=-40℃，T=1000HR	20Pcs	0/1
常温通电试验 Continuous operating test	JESD22-A108	IF=*mA，Ta=25℃，T=1000HR	30Pcs	0/1
高温高湿通电试验 High temperature and humidity operating test	JESD22-A101	IF=*mA，Ta=85℃，RH=85%RH，T=1000HR	20Pcs	0/1

失效判定标准 Judgement standard fail

项目 Parameter	符号 Symbol	测试条件 Test Condition	判定标准 Judgement standard	
			最小 Min	最大 Max
正向电压 Forward Voltage	VF(V)	IF=*mA	--	USL*×1.2
反向电流 Reverse current	IR(μA)	VR=*V	--	USL*×2.0
辐射功率 Radiant Power	Ie(mW/sr)	IF=*mA	Initial value×0.7	--

备注(Note)：

1. USL：规格上限；LSL 规格下限

2. 数据表格中所示的技术信息仅限于典型特征值和电路实例引用的产品，它既不构成工业特性的保证，也不构成任何许可的授权
   The technical information shown in the data table is limited to products referenced by typical eigenvalues and circuit instances and does not constitute a guarantee of industrial characteristics nor does it constitute an authorization of any license

3. *mA:试验电流；
   *mA: test current;

地址：深圳市龙岗区横岗街道 228 工业区永发工业园 48 号 3C 厂区
Address:3C, No. 48, YongFa Industrial Park, 228 Industrial Zone, HengGang street,LongGang ShenZhen
电话(Tel)：0755-85236381
网站(Web site)：http://www.jnjopto.com

卷轴尺寸 Reel Dimensions：

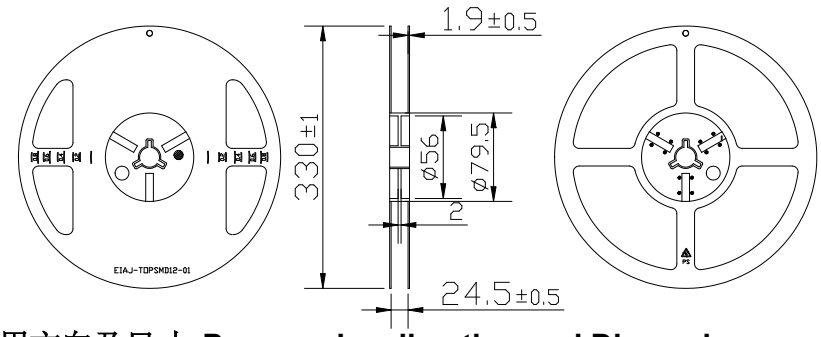

使用方向及尺寸 Progressive direction and Dimensions:

Loaded quantity 800PCS per reel

Progressive direction 使用方向

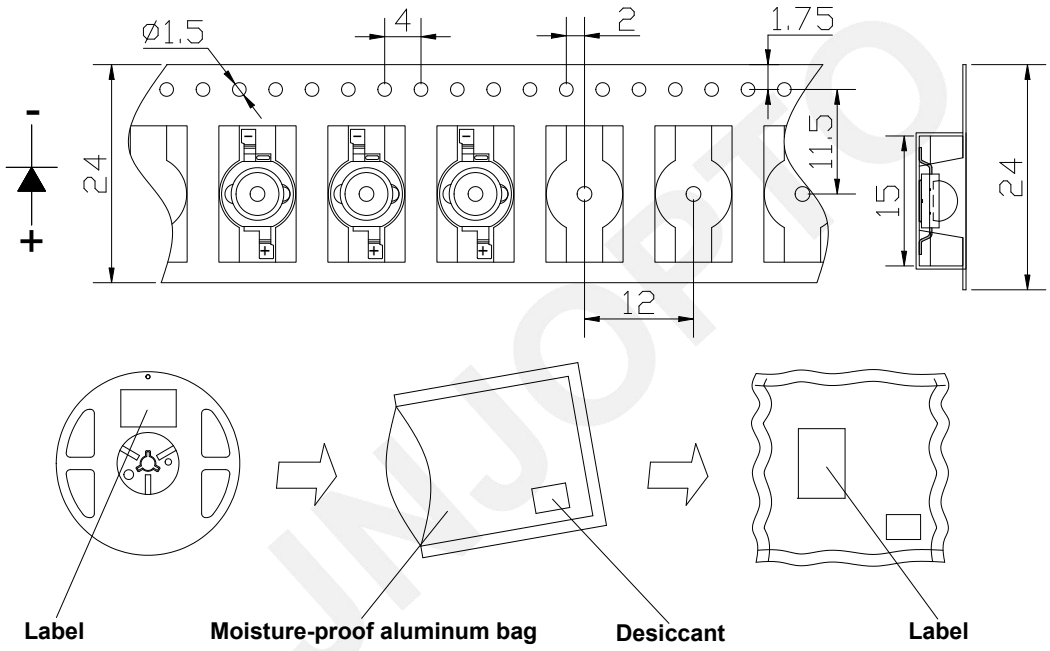

标签规格 Label Form Specification：

产品名称：	XXXXXXXXXXXXX
产品型号：	JNJ-XXXXXXXXX
产品料号：	XXXXXXXXXXXXX
批次号：	XXXXXXXXXXXXX
波　段：	XXX nm-XXX nm
电压(XXmA)：	X.XX V-X.XX V
亮度/功率：	XXXXXXXXXXXX
数　量：	XXXX pcs
日　期：	XXXX-XX-XX

注：开封后请于24小时内完成使用

LED 应用注意事项 Application precautions:

保存及使用 Preservation and use:

1. 在打开包装前，LED 应存放在 30℃/60%RH 或以下的环境中。打开包装后，LED 应置于 20-30℃/30%RH 或以下的环境中使用。
   Before opening the package, the LED should be stored at 30℃/60%RH or less.After opening the package, the LED should be placed in an environment of 20-30℃/30%RH or less.
2. molding 封装及 SMD LED 开封后要在 24H 之内使用，为了避免环境的影响，建议拆封后，经 过 60℃/24H 除湿，没用完 LED 需及时做抽真空包装处理，避免再次使用时发生失效。
   To avoid the impact of the environment, it is recommended to dehumidify after unpacking at 60℃/24H. All the leds are needed to be vacuumed to avoid failure
3. 若干燥剂褪色或过期使用，需干燥烘烤：60±5℃/24 小时。
   If the desiccant faded or expired use, dry baking:60±5℃/24 hours.
4. LED 的胶表面易沾灰尘，需要做好相关防尘措施。
   LED Glue surface easy to dust, need to do the relevant dust prevention measures.

取放 pick and place

夹取 LED 时只能触及支架体，镊子之类的工具不要对透镜施压。更不要刺或推透镜。
When taking the LED, you should only touch the bracket. Tools such as tweezers should not put pressure on the lens.Don't stab or push the lens.

热量处理 Heat treatment

在过大电流驱动时 LED 的 Tj（节点温度）会超过期限制值，这导致 LED 的寿命严重缩短，热量 处理措施要有效的减小应用产品的热阻。比较通用的做法：把 LED 封装器件安装在金属基质的 PCB 板上。1W LED 产品要求金属基板的表 面散热面积至少 30cm²（3W 产品建议 80cm²以上），且其导热系数要高于 2.0W/mK。LED 和金 属基板结合靠导热性较好的导热胶，要求导热系数高于 1.0W/mK，厚度小于 100um。

When driven by excessive current, the Tj (node temperature) of LED will exceed the period limit value, which leads to a serious shortening of LED life. Thermal treatment measures should effectively reduce the thermal resistance of application products.Common practice: install LED packages on metal matrix PCB boards.1W LED products require the surface heat dissipation area of the metal substrate to be at least 30cm squared (over 80cm squared is recommended for 3W products), and its thermal conductivity is higher than 2.0w /mK.LED and gold substrate are combined by thermal conductive adhesive with good thermal conductivity. The thermal conductivity coefficient is required to be higher than 1.0w /mK and the thickness is less than 100um.

清洁 Clean

需要清洁的话，用干净的软碎布沾点酒精轻力擦除异物，不可以采用诸如丙酮之类的清洁剂以免可能造成腐蚀破坏。
If you need to clean, use a clean, soft cloth dipped in alcohol to gently remove foreign matter. Do not use a cleaner such as acetone to avoid possible corrosion damage.

电性注意事项 Electrical precautions

1. LED 不允许反向驱动。
   Led Reverse drive is not allowed
2. 限流措施是必要的，否则轻微的电压变化会导致较大的电流变化，可能造成 LED 失效。
   Current limiting measures are necessary, otherwise slight voltage changes will lead to large current changes, which may lead to LED failure.
3. 在发光量满足要求的前提下，推荐采用低于额定电流的驱动电流，这样有利于提高产品的可靠性。
   Under the premise that the luminous quantity meets the requirements, it is recommended to use the drive current lower than the rated current, which is conducive to improving the reliability of the product.

防静电措施 anti-static precautions

LED 是静电敏感器件，在保存、使用过程中要采取防静电措施。 静电和电涌会导致产品特性发生改变，例如正向电压降低等，情况严重甚至会损毁产品。 所以对于整个工序（生产，测试，包装等）与 LED 直接接触的员工都要做好防止和消除静 电的措施。所有相关的设备和机器都应该正确接地。接地交流电阻小于 1.0 欧姆，工作台上需垫表面电阻 106-109 欧姆的桌垫。 在容易产生静电的环境和设备上，还必须安装离子风扇。作业过程中，操作员需使用防静电手环，防静电垫子，防静电工作服，工作鞋，手套，防静电容等。

LED is electrostatic sensitive devices, in the process of preservation, use to take anti-static measures.Static electricity and surge can lead to changes in product characteristics, such as forward voltage reduction, which can be serious and even damage the product.So for the whole

process (production, testing, packaging, etc.) and LED direct contact staff should do a good job to prevent and eliminate electrostatic measures.All related equipment and machinery should be properly grounded.The grounding ac resistance is less than 1.0 ohm, the table mat with surface resistance of 106-109 ohm is needed on the work table.Ion fans must also be installed in electrostatic environments and equipment.During the operation, the operator should use anti-static bracelet, anti-static mat, anti-static overalls, working shoes, gloves, anti-static capacity.

电烙铁焊接 An electric soldering iron

建议使用防静电电烙铁，尖端处温度不超过 350℃，每次焊锡时少于 3 秒。电烙铁的功率宜低于 60W。每焊完一次之后间隔 2 秒以上，分别焊好两个电极引脚。焊接时不可对透镜用力施压。LED 如有问题一般都是从焊锡时开始出现。故必须按要求小心作业。

It is recommended to use anti-static electric soldering iron, the temperature at the tip does not exceed 350℃, less than 3 seconds for each soldering.The power of the soldering iron should be less than 60W.Weld two electrode pins more than 2 seconds after each welding.Do not force the lens during welding.Problems with leds usually begin when they are soldered.So you must work carefully as required.

SMT 回流焊说明 Reflow instructions：

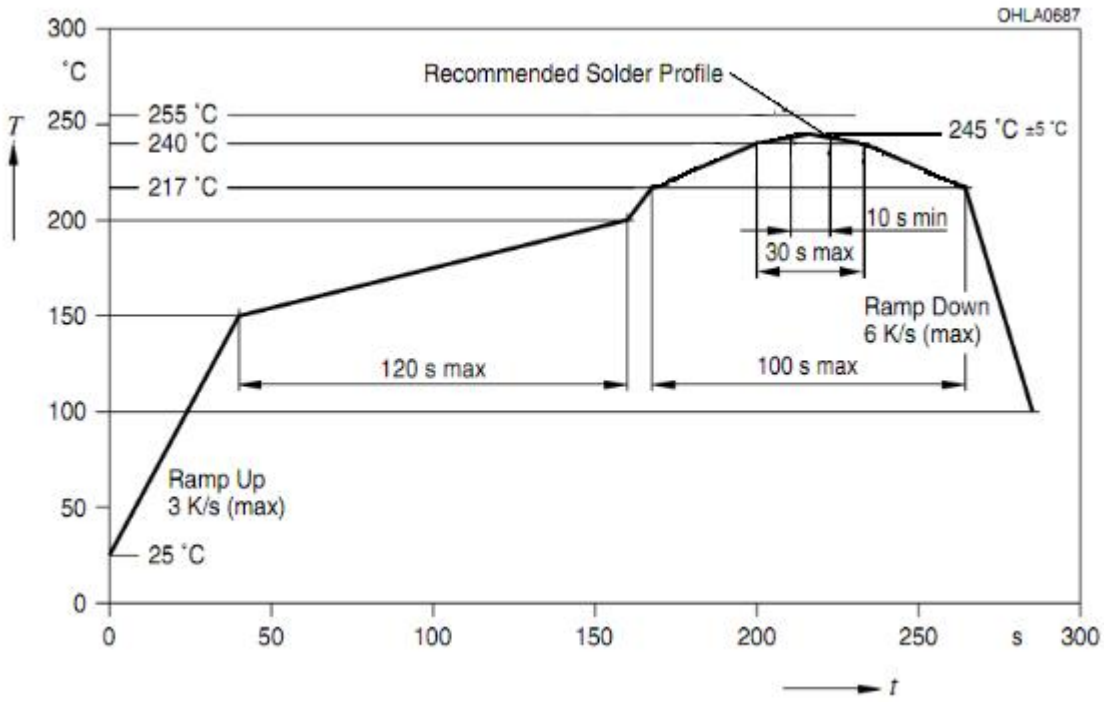

注意事项 matters need attention：

1. 回流焊只允许做一次。
   Reflow soldering is only allowed once.
2. 回流焊过程中不要对灯体施加压力。
   Do not apply pressure to the lamp body during reflow
3. 回流焊完成之后不要压挤散热板、不可压到胶体部分。
   After reflow welding is completed, do not press the heat dissipation plate, do not press to the colloidal part.
4. 若有比较低熔点的锡膏，TP 可以适当降低。
   If there is a lower melting point of solder paste, TP can be appropriately reduced.