# SST-10-IRD-940nm

# Dual Junction Surface Mount Series

# Infrared LED

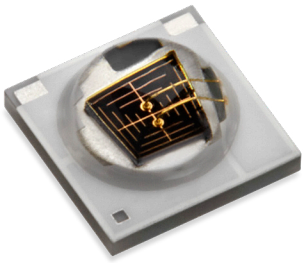

## Table of Contents

Technology Overview . . . . . .2
Product Binning. . . . . .3
Ordering Information . . . . . .3
Optical and Electrical Characteristics . . . . . .4
Mechanical Dimensions . . . .8
Tape and Reel . . . . . 11
Reel Information . . . . . 13
Shipping information . . . . 14
Soldering . . . . . 15
Precautions . . . . . 16
Revision History. . . . . 17

## Features

- High Power Infrared LED with typical 940nm centroid wavelength
- 50, 90 and 130-degree viewing angle
- Operation at up to 1.5A CW and 5A pulse
- Built-in ESD protection
- Low Thermal Resistance
- Suitable for all SMT Assembly Methods
- RoHS and REACh compliant

## Applications

- Surveillance Systems / CCTV
- Iris and Face Recognition
- License Plate Scanning
- Automotive Sensing
- Machine Vision
- Night Vision


PDS-003020 Rev 01 © 2018 Luminus Devices, Inc. - All Rights Reserved

**Luminus Devices, Inc.** • **T** 408.708.7000 • www.luminus.com
1145 Sonora Ct • Sunnyvale, CA 94086

## Technology Overview

Luminus SST-10-IRD-940nm LEDs benefit from innovations in device technology, chip packaging and thermal management. This suite of technologies give engineers and system designers the freedom to develop solutions both high in power and efficiency.

### Reliability

Luminus SST-10-IRD-940nm LEDs have passed a rigorous suite of environmental and mechanical stress tests, including mechanical shock, vibration, temperature cycling and humidity. They are fully qualified for use in a wide range of high performance and high efficacy applications.

### REACh & RoHS Compliance

The Luminus SST-10-IRD-940nm LED is compliant to the Restriction of Hazardous Substances Directive or RoHS. The restricted materials including lead, mercury cadmium hexavalent chromium, polybrominated biphenyls (PBB) and polybrominated diphenyl ether (PBDE) are not used.

## Understanding Luminus SST-10-IRD-940nm LED Test Specifications

Every Luminus LED is fully tested to ensure it meets the high quality standards customers have come to expect from Luminus products.

### Testing Temperature

Luminus SST-10-IRD-940nm LEDs are tested and binned at 25°C junction temperature. Temperature curves are provided to allow users to scale the data for actual operating temperature conditions.


PDS-003020 Rev 01 © 2018 Luminus Devices, Inc. - All Rights Reserved
**Luminus Devices, Inc.** • **T** 408.708.7000 • www.luminus.com
1145 Sonora Ct • Sunnyvale, CA 94086

## Product Ordering and Shipping Part Number Nomenclature

All SST-10-IRD-940nm products are packaged and labeled with part numbers as outlined in below. When shipped, each reel will contain only a single flux wavelength and Vf bin. The part number designation is as follows:

| Products | Ordering Part Number | Description |
|---|---|---|
| SST-10-IRD | SST-10-IRD-B##-F### | SST-10 dual junction surface mount infrared LED |

**SST — 10 — CC — B## — F###**

| Product Family | Chip Area | Color | Package Configuration | Bin Kit [1,2] |
|---|---|---|---|---|
| SST - Ceramic Surface Mount package w/ encapsulation | 10: 1.0 $mm^2$ | IRD = Dual Junction Infrared | B50 - 50 deg Beam Angle<br>B90 - 90 deg Beam Angle<br>B130 - 130 deg Beam Angle<br><br>Ceramic 3.45mm x 3.45mm<br>See Pages 8-10 for Detailed Drawings | See below for flux and wavelength binning information |

| Peak Wavelength | Minimum Flux Bin (mW) | Lens Angle | Ordering Part Number |
|---|---|---|---|
| 940 | 475 | 50 | ***SST-10-IRD-B50-S940*** |
| | 475 | 90 | ***SST-10-IRD-B90-S940*** |
| | 475 | 130 | ***SST-10-IRD-B130-S940*** |

### Flux Bins[1]

| Bin Code | Radiometric Power at 350mA, $t_p$=20ms | |
|---|---|---|
| | Minimum Flux (mW) | Maximum Flux (mW) |
| S | 475 | 505 |
| T | 505 | 535 |
| U | 535 | 565 |
| V | 565 | 595 |

### Wavelength Bins[1]

| Bin Code | Minimum Peak Wavelength (nm) | Maximum Peak Wavelength (nm) |
|---|---|---|
| 940 | 930 | 970 |



PDS-003020 Rev 01 © 2018 Luminus Devices, Inc. - All Rights Reserved

**Luminus Devices, Inc.** • **T** 408.708.7000 • www.luminus.com
1145 Sonora Ct • Sunnyvale, CA 94086

# Optical and Electrical Characteristics

## Optical and Electrical Characteristics[1]

| Parameter | Symbol | Package Type | | | Unit |
|---|---|---|---|---|---|
| | | B50 | B90 | B130 | |
| Forward Current | $I_f$ | 350 | | | mA |
| Output Power Typical | PO | 535 | | | mW |
| Output Power at 1.0A, t=20ms (typ.) | $PO_{1.0A}$ | 1,470 | | | mW |
| Radiant Intensity at 1.0A, t=20ms (typ.) | $\phi_e$ | 1270 | 770 | 410 | mW/sr |
| Minimum Forward Voltage[1] | $V_{f\,min}$ | 2.6 | | | V |
| Forward Voltage Typical | $V_f$ | 2.8 | | | V |
| Maximum Forward Voltage[1] | $V_{f\,max}$ | 3.2 | | | V |
| Viewing Angle | $2\,Ø_{1/2}$ | 50 | 90 | 130 | deg |
| Peak Wavelength Typical | $\lambda_p$ | 950 | | | nm |
| Centroid Wavelength Typical | $\lambda_c$ | 940 | | | nm |
| FWHM Typical | $\Delta\lambda_{1/2}$ | 30 | | | nm |
| Temperature Coefficient of Foward voltage | $TC_{V_F}$ | -3.0 | | | mV/°C |
| Temperature Coefficient of Radiometric Power | $TC_{PO}$ | -0.2 | | | %/°C |
| Temperature Coefficient of Wavelength | $TC_{\lambda}$ | 0.3 | | | nm/°C |
| Thermal Resistance (Electrical) | $R_{TH}$ | 5.3 | | | °C/W |

*Note 1: Binning based on operation at a current of 350mA, 20ms single pulse and a constant junction temperature of $T_j = 25°C$. Parts are binned and shipped in 0.2V Vf increments.*



PDS-003020 Rev 01 © 2018 Luminus Devices, Inc. - All Rights Reserved

Luminus Devices, Inc. • T 408.708.7000 • www.luminus.com
1145 Sonora Ct • Sunnyvale, CA 94086

# Optical and Electrical Characteristics

## Absolute Maximum Ratings[2]

| Parameter | Symbol | Rating | Unit |
|---|---|---|---|
| Forward Current[3,4] | I | 1.5 | A |
| Power Dissipation | $P_D$ | 6 | W |
| Reverse Voltage | $V_R$ | 5 | V |
| Storage Temperature | $T_{STG}$ | -40~100 | °C |
| Junction Temperature[3,4] | $T_J$ | 115 °C | °C |
| Soldering Temperature | $T_{SLD}$ | JEDEC 020 , 260 °C | |
| ESD Sensitivity (HBM) | $V_B$ | 6000 | V |

*Note 2: To prevent damage refer to operating conditions and derating curves for appropriate maximum operating conditions*

*Note 3: Luminus SST-10-IRD-940nm LEDs are designed for operation up to an absolute maximum forward drive current as specified above. Product lifetime data is specified at typical forward drive currents. Sustained operation at absolute maximum currents will result in a reduction of device lifetime compared to typical forward drive currents. Actual device lifetimes will also depend on junction temperature.*

*Note 4: Maximum operating case temperature combined with maximum drive current defines the total maximum operating condition for the device. To prevent damage, please operate devices within specified conditions.*

*Note 5: Caution must be taken not to stare at the light emitted from these LEDs. Under special circumstances, the high intensity could damage the eye.*



PDS-003020 Rev 01 © 2018 Luminus Devices, Inc. - All Rights Reserved

**Luminus Devices, Inc.** • **T** 408.708.7000 • www.luminus.com
1145 Sonora Ct • Sunnyvale, CA 94086

# Optical and Electrical Characteristics

## Relative Output Flux vs. Forward Current

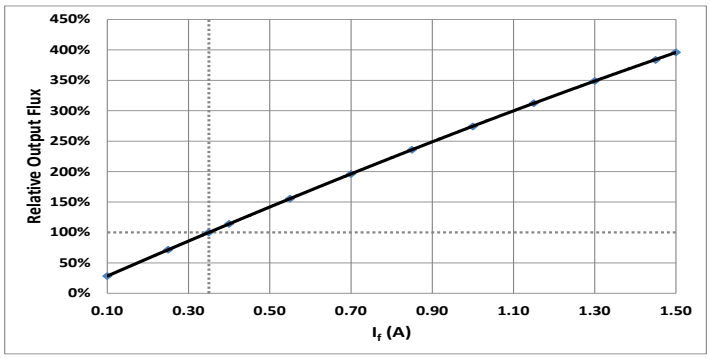


## Relative Output Flux vs. Temperature

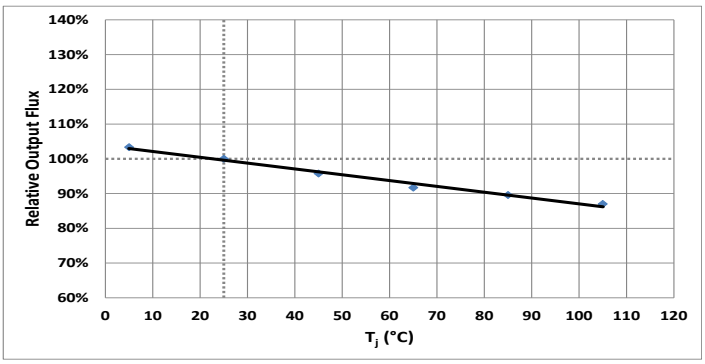


## Relative Forward Voltage vs. Forward Current

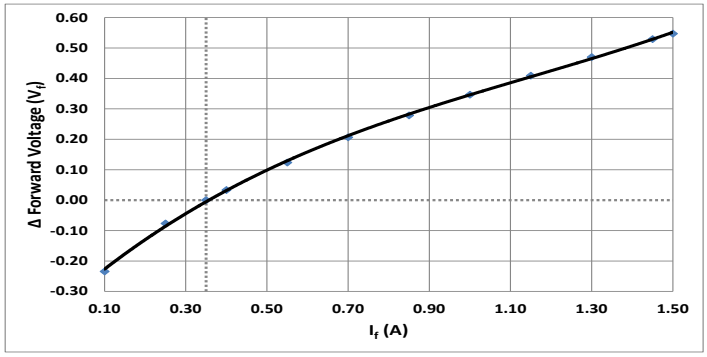


## Relative Forward Voltage vs. Temperature

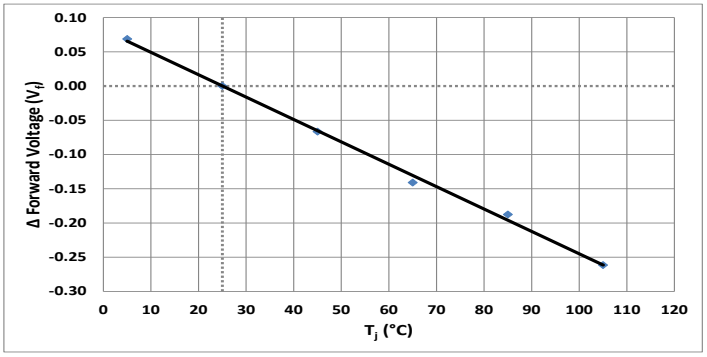


## Relative Peak Wavelength vs. Forward Current

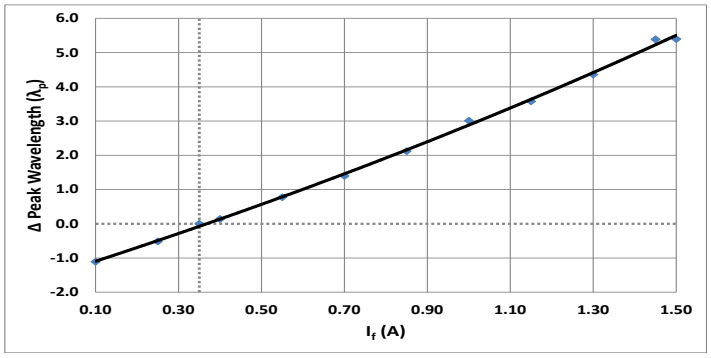


## Relative Peak Wavelength vs. Temperature

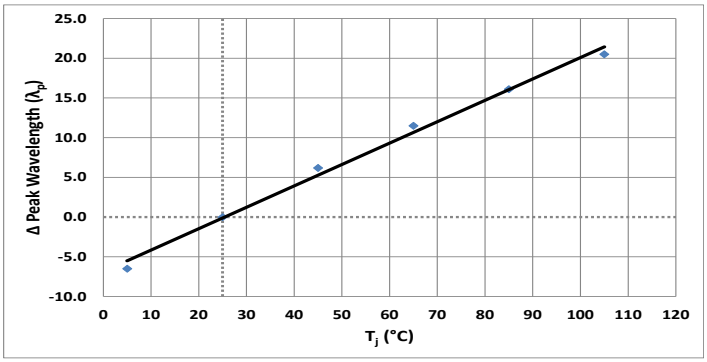




PDS-003020 Rev 01 © 2018 Luminus Devices, Inc. - All Rights Reserved

Luminus Devices, Inc. • T 408.708.7000 • www.luminus.com
1145 Sonora Ct • Sunnyvale, CA 94086

# Optical and Electrical Characteristics

## Typical Polar Radiation Plot - B50

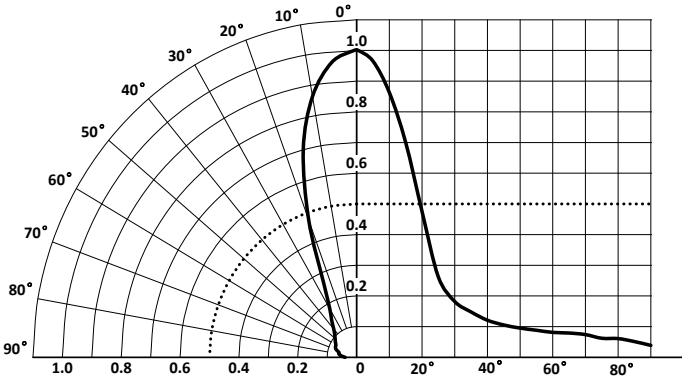


## Typical Polar Radiation Plot - B90

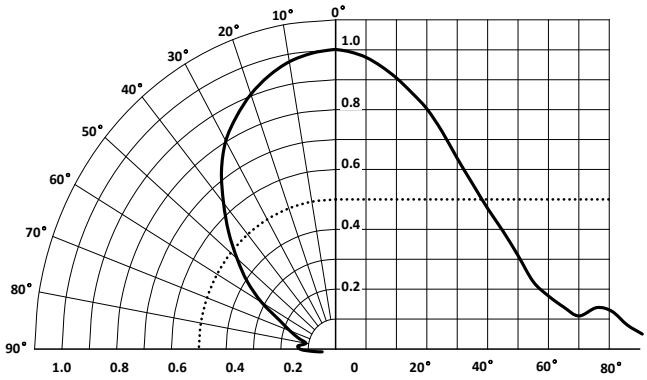


## Typical Polar Radiation Plot - B130

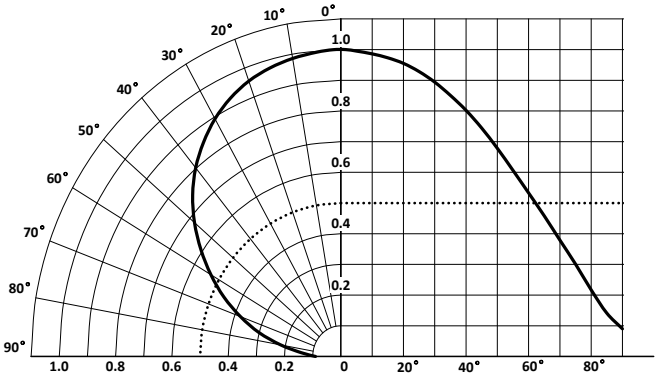


## Permissible Pulse Handling Capability

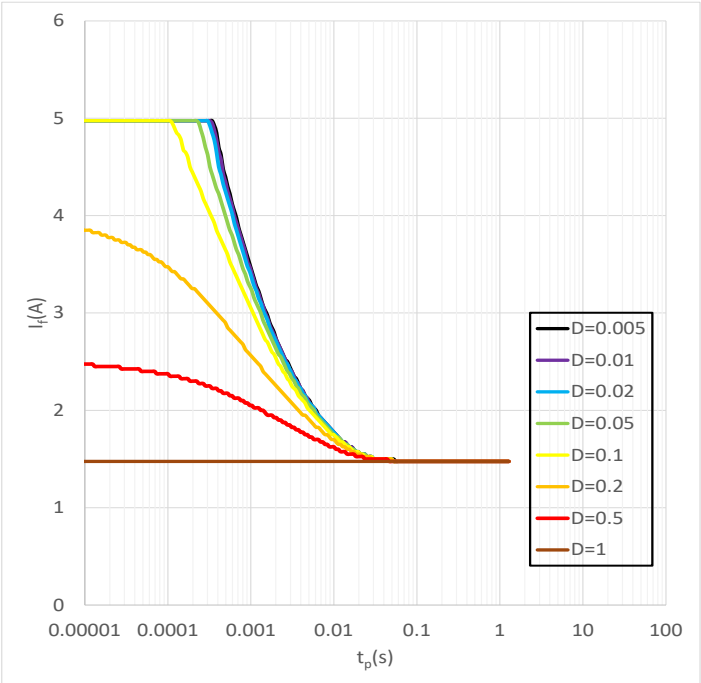


## Typical Spectrum

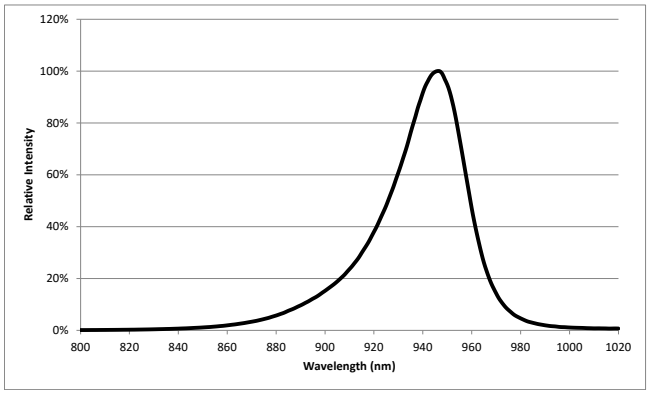



PDS-003020 Rev 01 © 2018 Luminus Devices, Inc. - All Rights Reserved
Luminus Devices, Inc. • T 408.708.7000 • www.luminus.com
1145 Sonora Ct • Sunnyvale, CA 94086

## Mechanical Dimensions - B50 Package

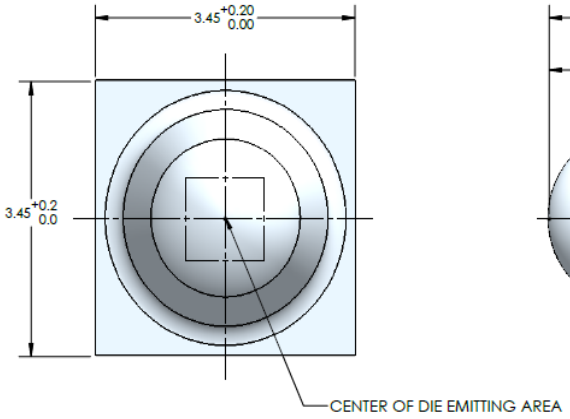


FRONT VIEW

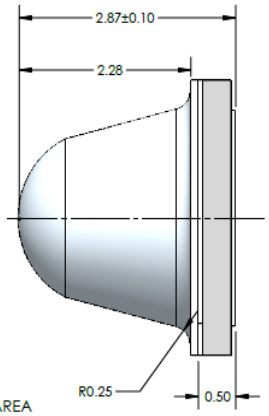


SIDE VIEW

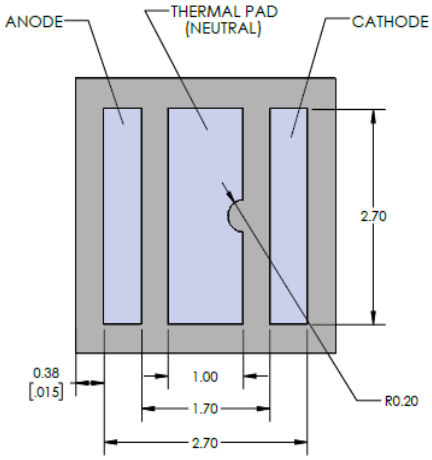


BACK VIEW

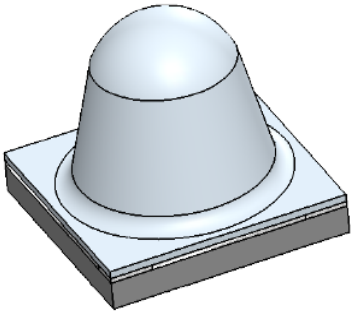

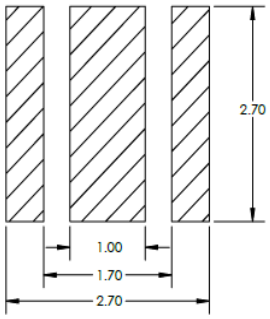


Recommended PCB Solder Pad


PDS-003020 Rev 01 © 2018 Luminus Devices, Inc. - All Rights Reserved
Luminus Devices, Inc. • T 408.708.7000 • www.luminus.com
1145 Sonora Ct • Sunnyvale, CA 94086

## Mechanical Dimensions - B90 Package

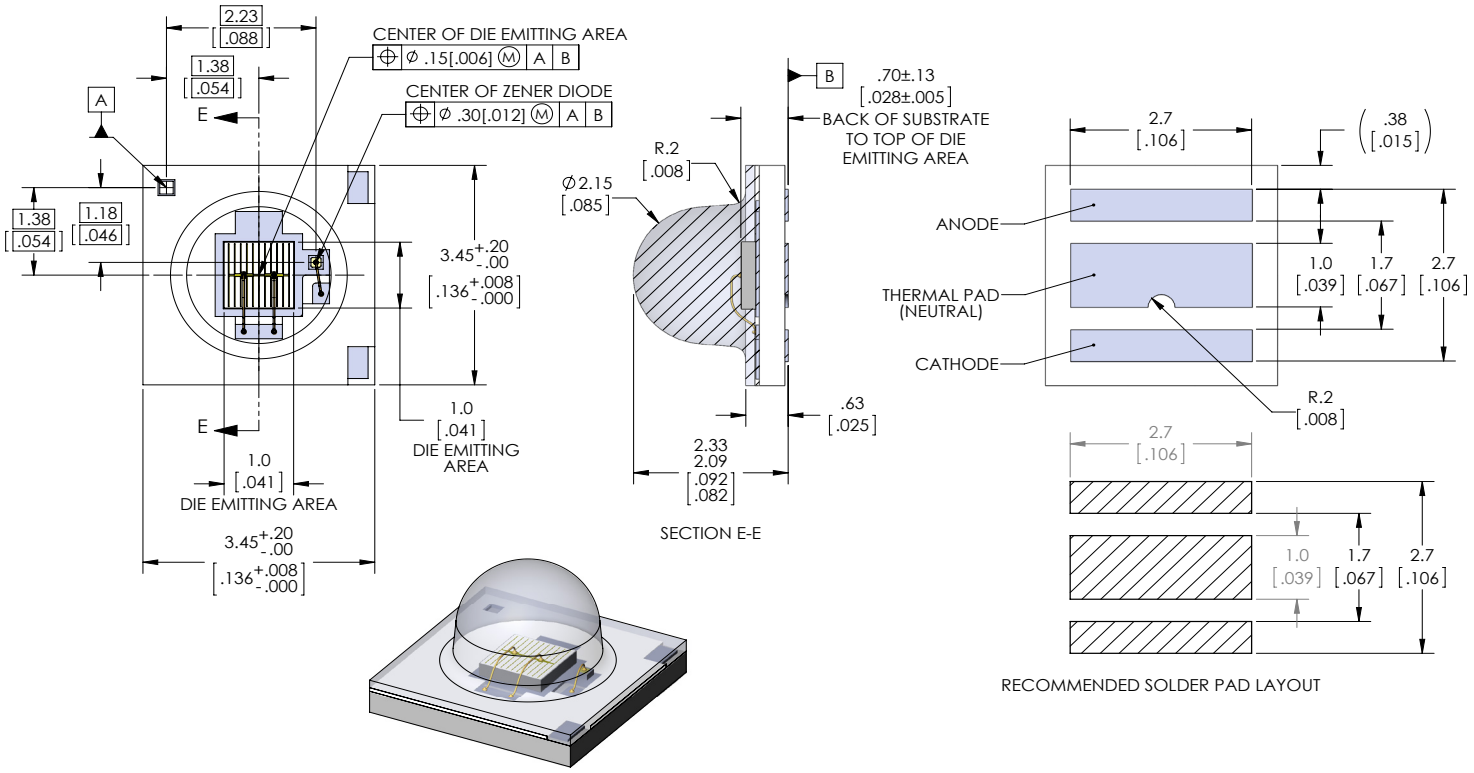




PDS-003020 Rev 01 © 2018 Luminus Devices, Inc. - All Rights Reserved

Luminus Devices, Inc. • T 408.708.7000 • www.luminus.com
1145 Sonora Ct • Sunnyvale, CA 94086

## Mechanical Dimensions - B130 Package

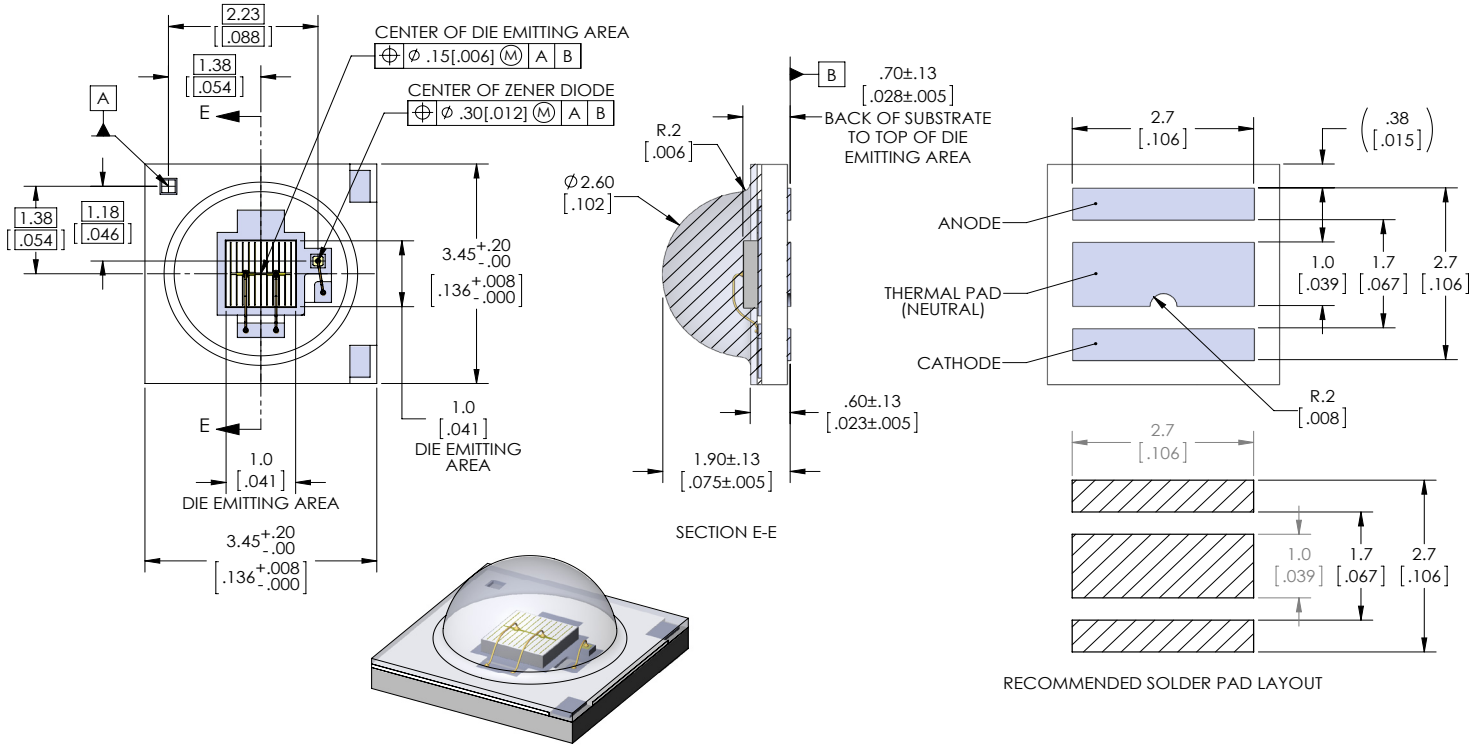




PDS-003020 Rev 01 © 2018 Luminus Devices, Inc. - All Rights Reserved

Luminus Devices, Inc. • T 408.708.7000 • www.luminus.com
1145 Sonora Ct • Sunnyvale, CA 94086

## Tape and Reel - B50 and B90 Packages

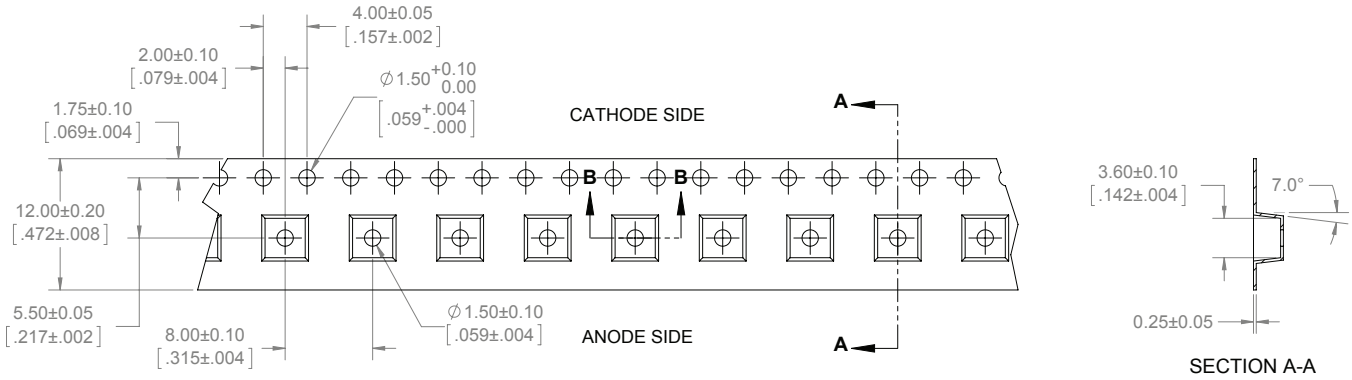





SECTION A-A

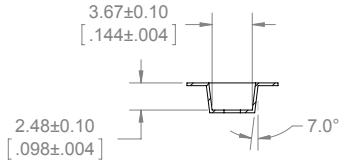


SECTION B-B

NOTES:

1. FINAL TAPE AND REEL PACKAGING MUST MEET THE REQUIREMENTS OF JEDEC-STD-033, LEVEL 2A.
2. LEAVE 304.8mm [12.00 in] OF TAPE EMPTY FOR LEAD IN (38 EMPTY POCKETS).
3. LEAVE 457.2mm [18.00 in] OF TAPE EMPTY FOR TRAILER (57 EMPTY POCKETS).
4. MUST COMPLY TO EIA-481-C-2003

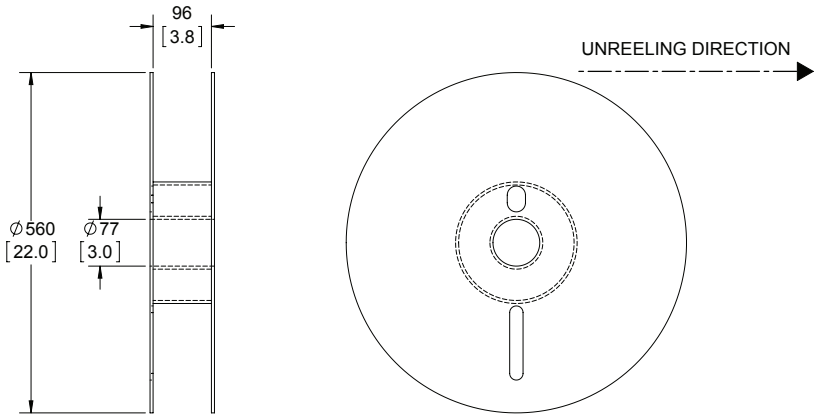


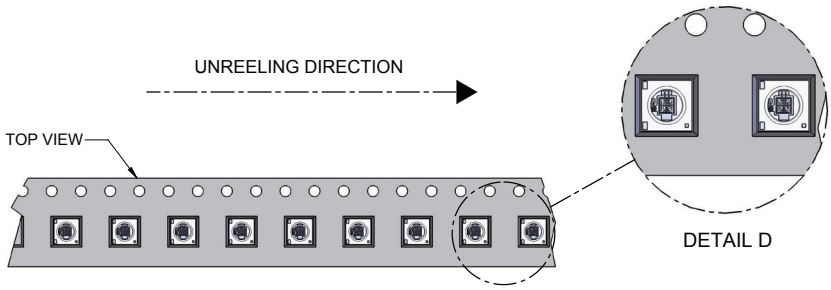



PDS-003020 Rev 01 © 2018 Luminus Devices, Inc. - All Rights Reserved
Luminus Devices, Inc. • T 408.708.7000 • www.luminus.com
1145 Sonora Ct • Sunnyvale, CA 94086

## Tape and Reel - B130 Package

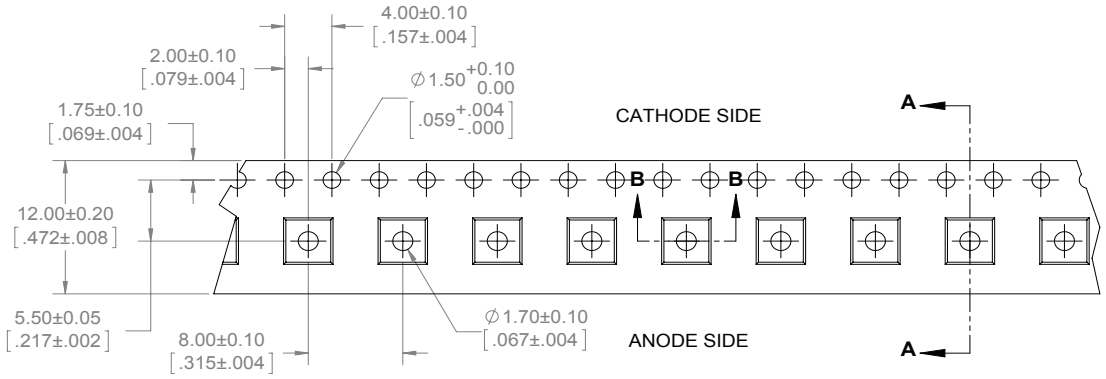


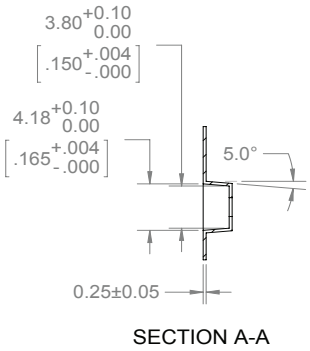


SECTION A-A

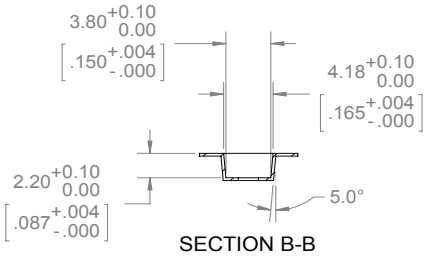


SECTION B-B

NOTES:

1. FINAL TAPE AND REEL PACKAGING MUST MEET THE REQUIREMENTS OF JEDEC-STD-033, LEVEL 2A.
2. LEAVE 304.8mm [12.00 in] OF TAPE EMPTY FOR LEAD IN (38 EMPTY POCKETS).
3. LEAVE 457.2mm [18.00 in] OF TAPE EMPTY FOR TRAILER (57 EMPTY POCKETS).
4. MUST COMPLY TO EIA-481-C-2003

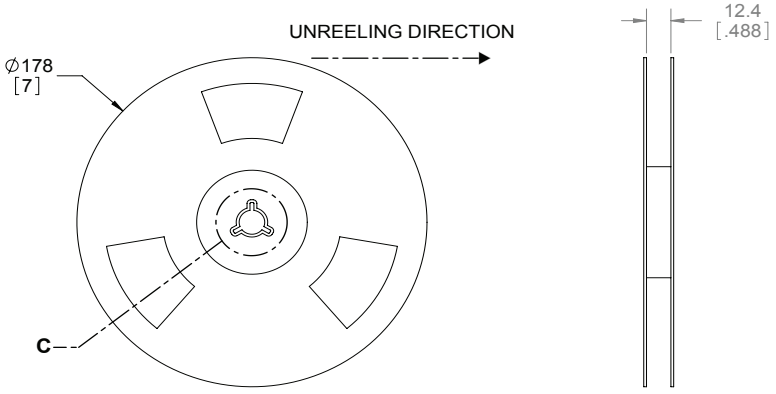


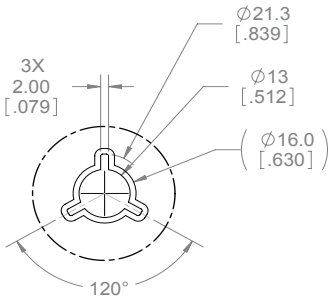


DETAIL C

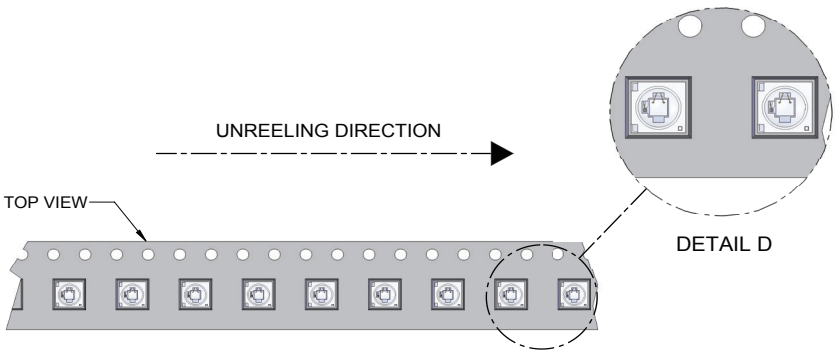


DETAIL D



PDS-003020 Rev 01 © 2018 Luminus Devices, Inc. - All Rights Reserved

Luminus Devices, Inc. • T 408.708.7000 • www.luminus.com
1145 Sonora Ct • Sunnyvale, CA 94086

## Reel Packaging

### 500 parts per reel for B50/B90 Packages - 1,000 parts per rel for B130 Package

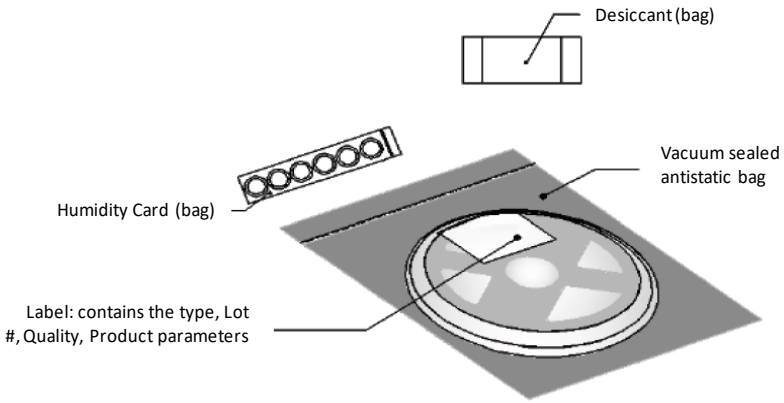


## Reel Label

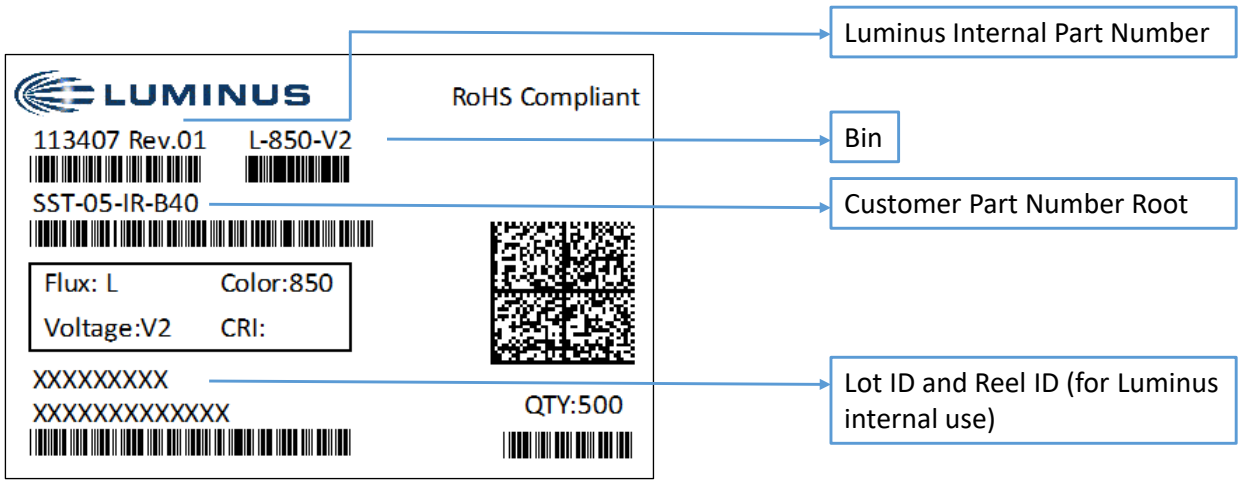



PDS-003020 Rev 01 © 2018 Luminus Devices, Inc. - All Rights Reserved
Luminus Devices, Inc. • T 408.708.7000 • www.luminus.com
1145 Sonora Ct • Sunnyvale, CA 94086

## Shipping Label

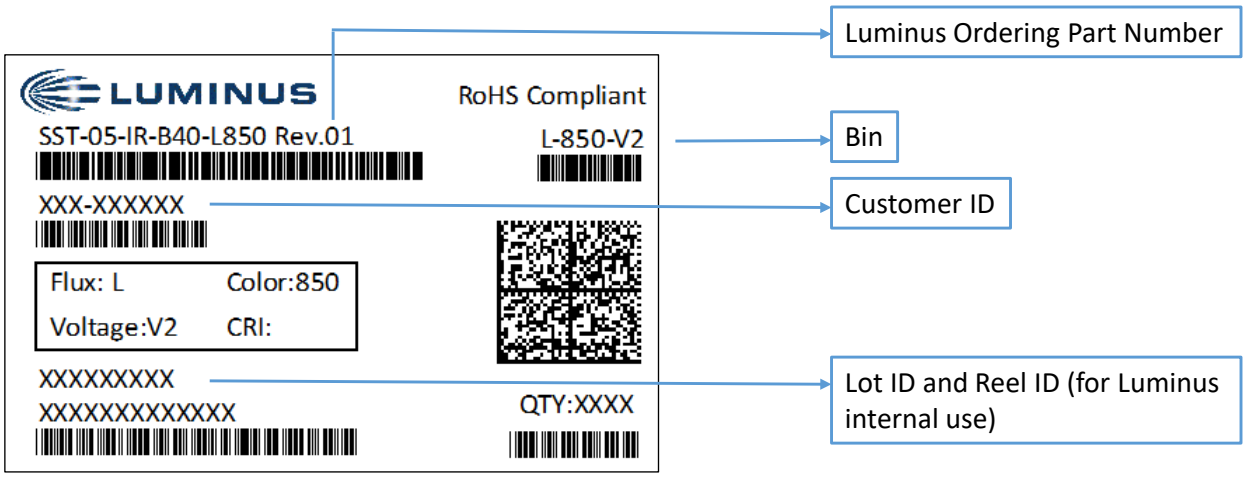


## Box Packaging Information

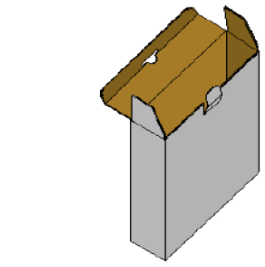

*Capacity 5 reels per box

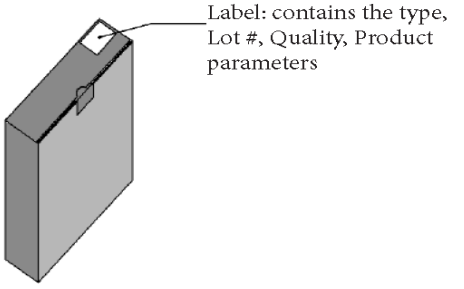


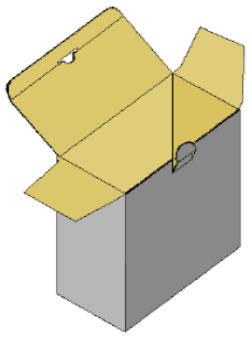

*Capacity 10 reels per box

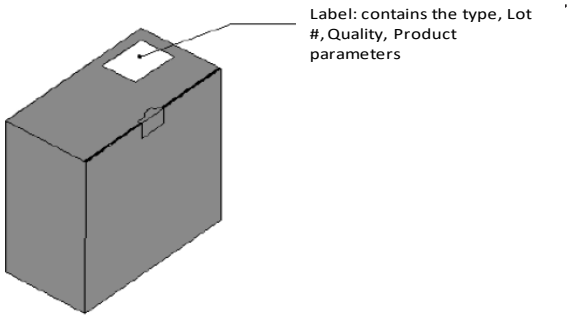



PDS-003020 Rev 01 © 2018 Luminus Devices, Inc. - All Rights Reserved
Luminus Devices, Inc. • T 408.708.7000 • www.luminus.com
1145 Sonora Ct • Sunnyvale, CA 94086

## Soldering Profile

| Profile Feature | Sn-Pb Eutectic Assembly | Pb-Free Assembly |
|---|---|---|
| Preheat & Soak<br>Temperature min (Tsmin)<br>Temperature max (Tsmax)<br>Time (Tsmin to Tsmax) (ts) | 100 °C<br>150 °C<br>60-120 seconds | 150 °C<br>200 °C<br>60-120 seconds |
| Average ramp-up rate (Tsmax to Tp) | 3 °C/second max | 3 °C/second max |
| Liquidous temperature (TL)<br>Time at liquidous (tL) | 183 °C<br>60-150 seconds | 217 °C<br>60-150 seconds |
| Peak package body temperature (Tp)* | 230 °C ~235 °C | 255 °C ~260 °C |
| Classification temperature (Tc) | 235 °C | 260 °C |
| Time (tp) within 5 °C of the specified classification temperature (Tc) | 20 seconds | 30 seconds |
| Average ramp-down rate (Tp to Tsmax) | 6 °C/second max | 6 °C/second max |
| Time 25 °C to peak temperature | 6 minutes max | 8 minutes max |

* Tolerance for peak profile temperature(Tp) is defined as a supplier minimum and a user maximum.
** Tolerance for time at peak profile temperature(tp) is defined as asupplier minimum and a user maximum.

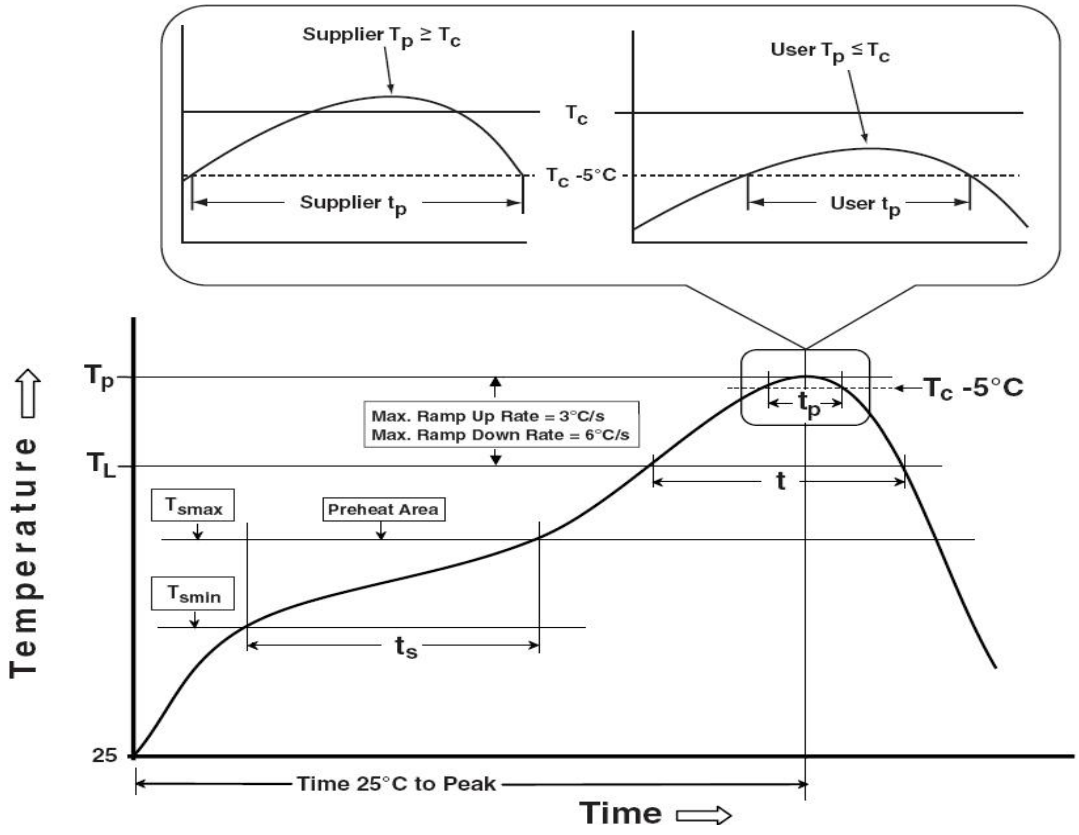



PDS-003020 Rev 01 © 2018 Luminus Devices, Inc. - All Rights Reserved
Luminus Devices, Inc. • T 408.708.7000 • www.luminus.com
1145 Sonora Ct • Sunnyvale, CA 94086

## Precautions for Use

Storage:

1. Before opening the package

The LEDs should be kept at <40 & <90%RH. The LEDs should be used within a year. When storing the LEDs, moisture proof package with absorbent material (silica gel) is recommended.

2. After opening the package

The LEDs should be kept at ≤ 30 & ≤ 60%RH. The LEDs should be soldered within 168 hours (7days) after opening the moisture proof package.

If unused LEDs remain, they should be stored in moisture proof packages, such as sealed containers with moisture proof package within absorbent material (silica gel).It is also recommended to return the unused LEDs to the original moisture proof package and to seal the moisture proof package again.

If the moisture absorbent material (silica gel) vapors or expires the expiration date, baking treatment should be performed by using the following conditions : 60 °C for 20 hours.

The LEDs electrode and leadframe comprise a silver plated copper alloy. The silver surface may be affected by environments. Please avoid conditions which may cause the LEDs being corroded or discolored. The corrosion or discoloration might lower solderability or affect optical characteristics.

Please avoid rapid transition in ambient temperature, especially in high humidity environments where condensation can occur.

Static Electricity:

1. The products are sensitive to static electricity, and care should be taken when handling them.

2. Static electricity or surge voltage will damage the LEDs. It is recommended to wear a anti-electrostatic wristband or an anti-electrostatic gloves when handling the LEDs.

3. All devices, equipment and machinery must be properly grounded. It is recommended that measures be taken against surge voltage to the equipment that mounts the LEDs.


PDS-003020 Rev 01 © 2018 Luminus Devices, Inc. - All Rights Reserved
Luminus Devices, Inc. • T 408.708.7000 • www.luminus.com
1145 Sonora Ct • Sunnyvale, CA 94086

## History of Changes

| Rev | Date | Description of Change |
|---|---|---|
| 01 | 12/30/2018 | Initial Release |

The products, their specifications and other information appearing in this document are subject to change by Luminus Devices without notice. Luminus Devices assumes no liability for errors that may appear in this document, and no liability otherwise arising from the application or use of the product or information contained herein. None of the information provided herein should be considered to be a representation of the fitness or suitability of the product for any particular application or as any other form of warranty. Luminus Devices' product warranties are limited to only such warranties as accompany a purchase contract or purchase order for such products. Nothing herein is to be construed as constituting an additional warranty. No information contained in this publication may be considered as a waiver by Luminus Devices of any intellectual property rights that Luminus Devices may have in such information. Big Chip LEDs™ is a registered trademark of Luminus Devices, Inc., all rights reserved.

This product is protected by U.S. Patents 6,831,302; 7,074,631; 7,083,993; 7,084,434; 7,098,589; 7,105,861; 7,138,666; 7,166,870; 7,166,871; 7,170,100; 7,196,354; 7,211,831; 7,262,550; 7,274,043; 7,301,271; 7,341,880; 7,344,903; 7,345,416; 7,348,603; 7,388,233; 7,391,059 Patents Pending in the U.S. and other countries.

 © 2018 Luminus Devices, Inc. - All Rights Reserved

**Luminus Devices, Inc.** • **T** 408.708.7000 • www.luminus.com
1145 Sonora Ct • Sunnyvale, CA 94086