MSKSEMI 美森科
SEMICONDUCTOR

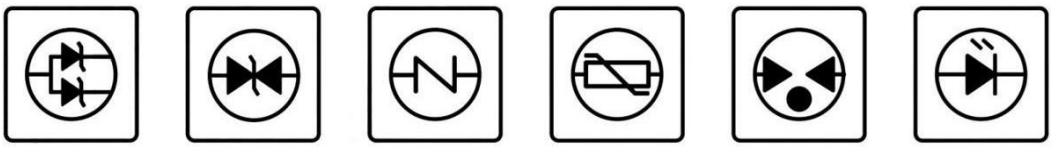

MSTLV61220DBVR

Product specification

GENERAL DESCRIPTION

The MSTLV61220DBVR is a high efficiency, current mode, synchronous boost converter which could operate fromsingle or dual-cell Alkaline battery such as the input voltage below 0.9V. The converter output voltage can be adjusted to 5.5V by an external resistor divider. In light load, the MSTLV61220DBVR enters into the power-save mode to maintain high efficiency.

The MSTLV61220DBVR provides true output disconnect and this allows VOUT to go to zero volt during shutdown without drawing any current from the input source.

The MSTLV61220DBVR integrated a 0.5Ω N-channel MOSFET switch and 0.6Ω P-channel synchronous rectifier. No external Schottky diode is required The device is available in SOT-23-6 package.

FEATURES

- Input Voltage Range:0.9V to 5.5V
- 1.2MHz Fixed Switching Frequency
- Adjustable Output Voltage up to 5.5V
- Accurate Reference Voltage 0.5V
- Integrated 0.5Ω NMOS and 0.6Ω PMOS
- Internal 1.2A Switch Current Limit
- Load Disconnect During Shutdown
- Thermal Shutdown Protection
- Available in SOT23-6 Package
- RoHS Compliant and Halogen Free

APPLICATIONS

- Single or Dual cell Alkaline
- 1 Cell Li-Ion or Li-Primary
- Personal Medical Products
- Handheld Instrument

Reference News

SOT-23-6	Pin Configuration	MARKING
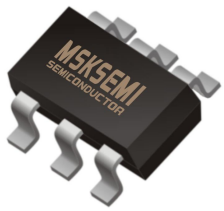	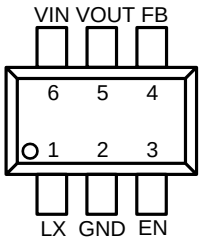	

Pin Description

Pin No.	Pin Name	Pin Description
1	LX	Inductor node. Connect an inductor from power input to LX pin.
2	GND	Ground pin.
3	EN	Enable pin.
4	FB	Feedback Input. The reference voltage is 0.5V.
5	VOUT	Output Supply pin.
6	VIN	Input Supply pin.

Copyright© Msksemi Incorporated

ORDERINFORMATION

P/N	PKG	QTY
MSTLV61220DBVR	SOT-23-6	3000

Typical Application Circuit

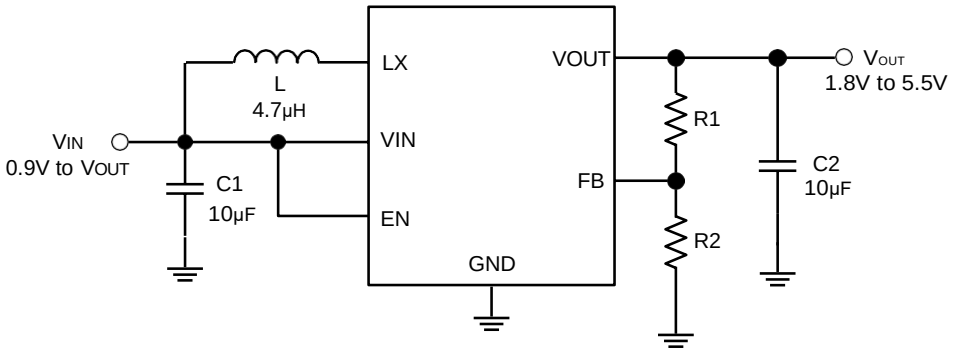

Functional Block Diagram

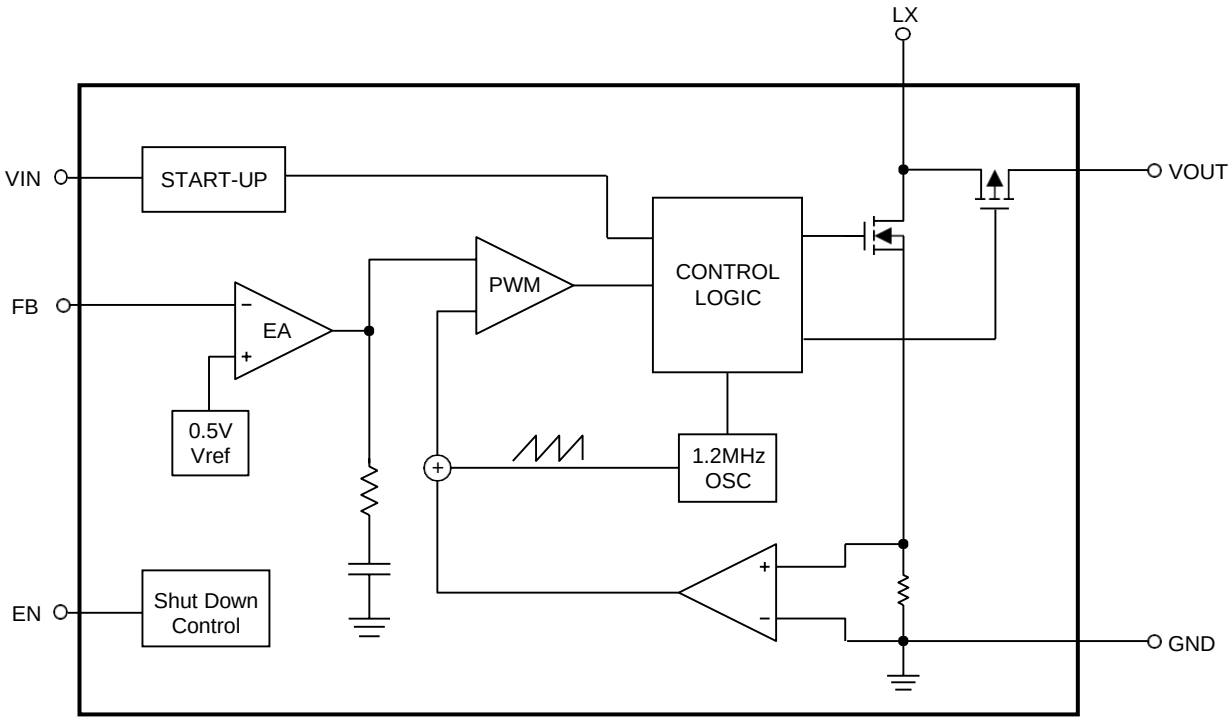

Copyright© Msksemi Incorporated

Absolute Maximum Ratings (Note 1)

VIN, EN, FB, VOUT	−0.3V to 5.5V
LX	−0.3V to 6.0V
Power Dissipation, PD @ T_A = 25°C	
SOT23-6	0.4W
Package Thermal Resistance	
SOT23-6, θ_{JA}	250°C/W
Lead Temperature (Soldering, 10 sec.)	- 260°C
Junction Temperature	150°C
Storage Temperature Range	−55°C to 150°C
ESD Susceptibility	
HBM (Human Body Model)	2kV
CDM (Charged Device Model)	200V

Recommended Operating Conditions

VIN	0.9V to 5.5V
Junction Temperature Range	−40°C to 85°C

Copyright© Msksemi Incorporated

Electrical Characteristics

VIN = EN = 5V, T_A=25°C, unless otherwise noted.

Parameter	Symbol	Test Conditions	Min	Typ	Max	Unit
Start-up Voltage	V_{ST}	V_{OUT}=3.3V, R_{LOAD}=3.3kΩ		0.9		**V**
VIN UVLO	V_{UVLO}	V_{IN} decreasing		0.7		**V**
Output Voltage Range	V_{OUT}		1.8		5.5	**V**
Output Over Voltage	V_{OVP}			6.0		**V**
VIN Shutdown Current	I_{SHDN}	EN=0V		0.2		**μA**
VIN Quiescent Current	I_{Q1}	V_{IN}=V_{EN}=1.2V, V_{FB}=0.6V		0.5	0.9	**μA**
VOUT Quiescent Current	I_{Q2}	V_{OUT}=3.3V		5.5		**μA**
Feedback Reference Voltage	V_{FB}		490	500	510	**mV**
FB input current	I_{FB}				0.1	**μA**
Switch NMOS Ron	R_{ONN}			500		**mΩ**
Rectifier PMOS Ron	R_{ONP}			600		**mΩ**
Switch Frequency	fsw			1.2		**MHz**
Switch Current Limit	I_{LMT}			1.2		**A**
Enable High Voltage	V_{ENH}	VIN<1.5V	0.8*V_{IN}			**V**
Enable Low Voltage	V_{ENH}	VIN<1.5V			0.2*V_{IN}	**V**
Enable High Voltage	V_{ENL}	1.5<VIN<5.5V	1.2			**V**
Enable Low Voltage	V_{ENL}	1.5<VIN<5.5V			0.4	**V**
Enable Input Current	I_{EN}			1		**μA**
Thermal Shutdown Threshold	T_{SD}			150		**℃**
Thermal Shutdown Hysteresis	ΔT_{SD}			20		**℃**

Note 1. Stresses beyond those listed “Absolute Maximum Ratings” may cause permanent damage to the device. These are stress ratings only, and functional operation of the device at these or any other conditions beyond those indicated in the operational sections of the specifications is not implied. Exposure to absolute maximum rating conditions may affect device reliability.

Copyright© Msksemi Incorporated

Application Information

Setting the Output Voltage

The output voltage is divided by a resistor divider, R1 and R2 to the FB pin. The internal reference V_{REF} is 0.5V (Typical). The output voltage is given by:

$$V_{OUT} = V_{REF} \times (1+\frac{R1}{R2})$$

Selecting large resistance values for both R1 and R2 to minimize the power consumption. R2 is recommended to be 100kΩ.

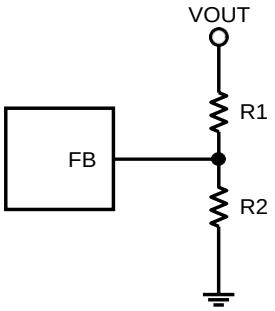

Input capacitor C_{IN}

To minimize the potential noise problem, place a typical X5R or better grade ceramic capacitor close to the VIN and GND pins, minimize the loop area formed by C_{IN}, and VIN/GND pins. In this case a 10uF or larger low ESR ceramic is recommended.

Output capacitor C_{OUT}

The output capacitor is selected to handle the output ripple noise requirements. Both steady state ripple and transient requirements must be taken into consideration when selecting this capacitor. For the best performance, it is recommended to use X5R or better grade ceramic capacitor and a 10uF or larger low ESR ceramic.

Inductor Selection

A boost converter normally requires two main passive components for storing energy during the conversion. A boost inductor is required and a storage capacitor at the output. To select the boost inductor, it is recommended to keep the possible peak inductor current below the current limit threshold of the power switch in the chosen configuration.

The second parameter for choosing the inductor is the desired current ripple in the inductor. Normally, it is advisable to work with a ripple of less than 20% of the average inductor current. A smaller ripple reduces the magnetic hysteresis losses in the inductor, as well as output voltage ripple and EMI. But in the same way, regulation time at load changes rises. In addition, a larger inductor increases the total system cost. With those parameters, the value of the inductor is given by:

$$L = \frac{V_{IN} \times (V_{OUT}-V_{IN})}{\Delta I_L \times f \times V_{OUT}}$$

Parameter f is the switching frequency and ΔI_L is the ripple current in the inductor, i.e, 20% x I_L. With this calculated value and currents, it is possible to choose a suitable inductor. Care must be taken that load transients and losses in the circuit can lead to higher currents. Also, the losses in the inductor caused by magnetic hysteresis losses and copper losses are a major parameter for total circuit efficiency.

Layout Consideration

As for all switching power supplies, the layout is an important step in the design, especially at high-peak currents and high switching frequencies. If the layout is not carefully done, the regulator could show stability problems as well as EMI problems. Therefore, use wide and short traces for the main current path and for the power ground tracks. The input capacitor, output capacitor, and the inductor should be placed as close as possible to the IC. Use a common ground node for power ground and a different one for control ground to minimize the effects of ground noise. Connect these ground nodes at any place close to the ground pin of the IC.

The feedback divider should be placed as close as possible to the ground pin of the IC. To lay out the control ground, it is recommended to use short traces as well, separated from the power ground traces. This avoiCHX ground shift problems, which can occur due to superimposition of power ground current and control ground current.

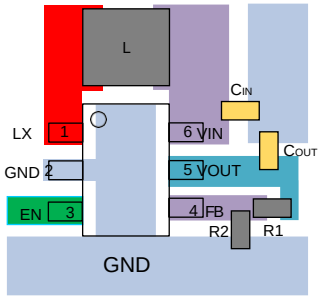

Figure Layout Example

Outline Dimension

SOT23-6 Package

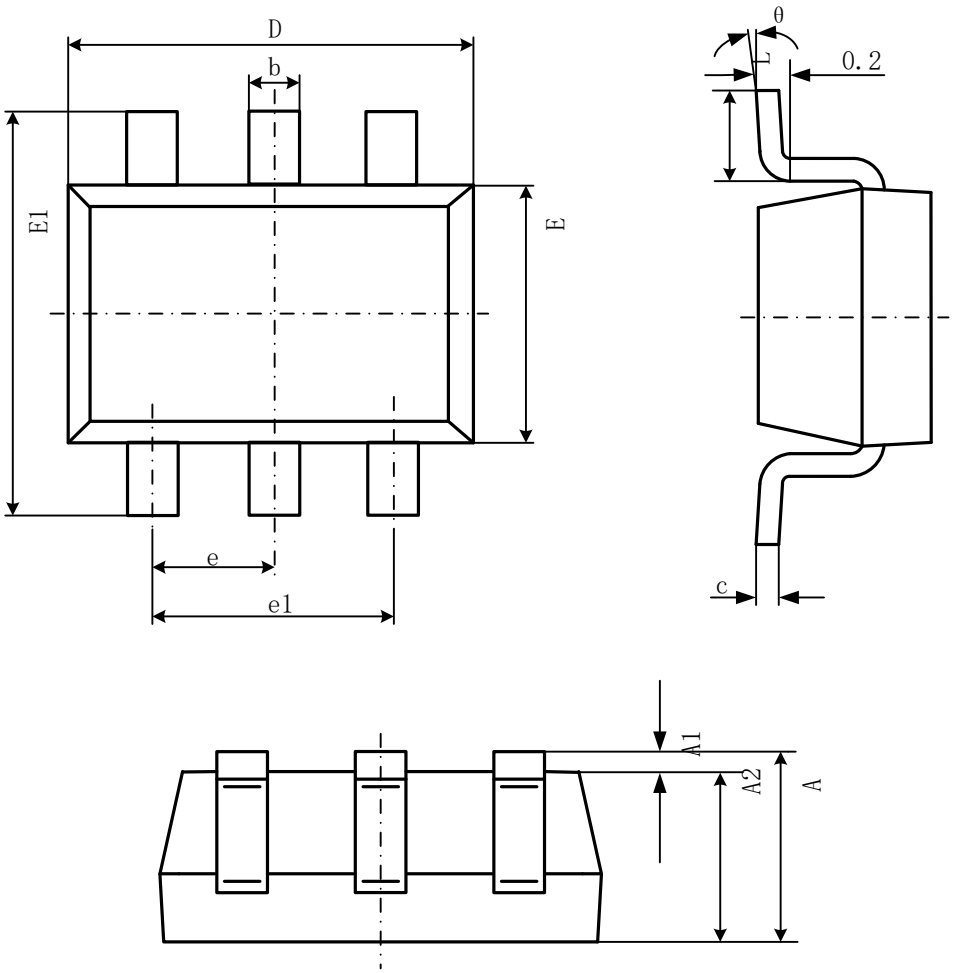

Symbol	Dimensions In Millimeters		Dimensions In Inches	
	Min	Max	Min	Max
Z	1.050	1.250	0.041	0.049
A1	0.000	0.100	0.000	0.004
A2	1.050	1.150	0.041	0.045
b	0.300	0.500	0.012	0.020
c	0.100	0.200	0.004	0.008
D	2.820	3.020	0.111	0.119
E	1.500	1.700	0.059	0.067
E1	2.650	2.950	0.104	0.116
e	0.950(BSC)		0.037(BSC)	
e1	1.800	2.000	0.071	0.079
L	0.300	0.600	0.012	0.024
θ	0°	8°	0°	8°

Copyright© Msksemi Incorporated

Attention

■ Any and all MSKSEMI Semiconductor products described or contained herein do not have specifications that can handle applications that require extremely high levels of reliability, such as life-support systems, aircraft's control systems, or other applications whose failure can be reasonably expected to result in serious physical and/or material damage. Consult with your MSKSEMI Semiconductor representative nearest you before using any MSKSEMI Semiconductor products described or contained herein in such applications.

■ MSKSEMI Semiconductor assumes no responsibility for equipment failures that result from using products at values that exceed, even momentarily, rated values (such as maximum ratings, operating condition ranges, or other parameters) listed in products specificationsof any andall MSKSEMI Semiconductor products described orcontained herein.

■ Specifications of any and all MSKSEMI Semiconductor products described or contained herein stipulate the performance, characteristics, and functions of the described products in the independent state, and are not guarantees of the performance, characteristics, and functions of the described products as mounted in the customer's products or equipment. To verify symptoms and states that cannot be evaluated in an independent device, the customer should always evaluate and test devices mounted in the customer'sproducts orequipment.

■ MSKSEMI Semiconductor. strives to supply high-quality high-reliability products. However, any and all semiconductor products fail with someprobability. It is possiblethat these probabilistic failures could give rise to accidents or events that could endanger human lives, that could give rise to smoke or fire, or that could cause damage to other property. When designing equipment, adopt safety measures so that these kinds of accidents or events cannot occur. Such measures include but are not limited to protective circuits anderror prevention circuitsfor safedesign, redundant design, and structural design.

■ In the event that any or all MSKSEMI Semiconductor products(including technical data, services) described or contained herein are controlled under any of applicable local export control laws and regulations, such products must not be exported without obtaining the export license from theauthorities concerned in accordance with the above law.

■ No part of this publication may be reproduced or transmitted in any form or by any means, electronic or mechanical, including photocopying and recording, or any information storage or retrieval system, or otherwise, without the prior written permission of MSKSEMI Semiconductor.

■ Information (including circuit diagrams and circuit parameters) herein is for example only ; it is not guaranteed for volume production. MSKSEMI Semiconductor believes information herein is accurate and reliable, but no guarantees are made or implied regarding its use or any infringementsof intellectual property rights or other rightsof third parties.

■ Any and all information described or contained herein are subject to change without notice due to product/technology improvement, etc. Whendesigning equipment, referto the "Delivery Specification" for the MSKSEMI Semiconductor productthat you intend to use.

Copyright© Msksemi Incorporated