DATASHEET

Technical Data Sheet
0402 Package Infrared LED
IR16-213C/L510/TR8

Features

- High reliability
- Small double-end package
- Compatible with infrared and vapor phase reflow solder process.
- Pb free
- The product itself will remain within RoHS compliant version.
- Compliance with EU REACH.
- Compliance Halogen Free .(Br <900 ppm ,Cl <900 ppm , Br+Cl < 1500 ppm)

Description

- IR16-213C/L510/TR8 is an infrared emitting diode in miniature SMD package which is molded in a water clear epoxy. The device is spectrally matched with silicon photodiode and phototransistor.

Applications

- PCB mounted infrared sensor
- Infrared remote control units with high power requirement
- Scanner
- Infrared applied system

Device Selection Guide

Device No.	Chip Material	Lens Color
IR16-213C/L510/TR8	GaAlAs	Water Clear

Copyright © 2010, Everlight All Rights Reserved. Release Date : Aug.11.2017. Issue No: DIR-0001661 Rev.3

Ver.:3 Release Date:08/21/2017 狀態:Approved(正式發行)

Package Dimensions

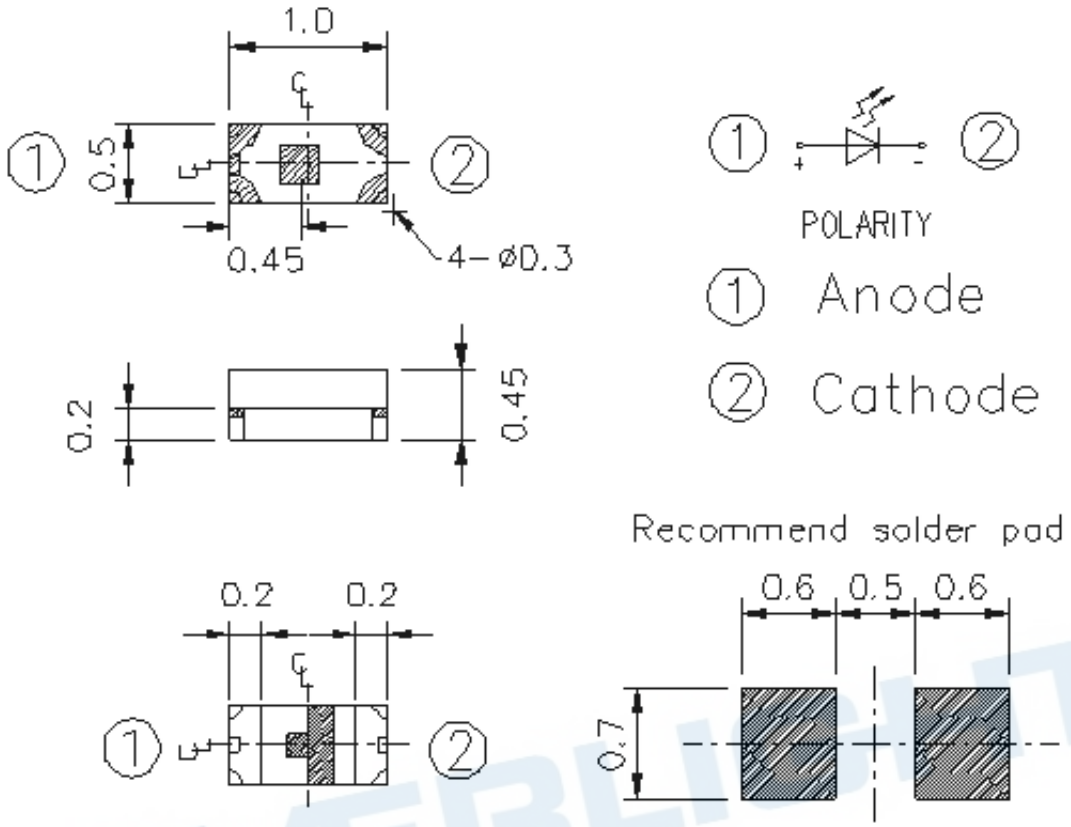

Notes: 1.All dimensions are in millimeters
2.Tolerances unless dimensions ±0.1mm

Absolute Maximum Ratings (Ta=25℃)

Parameter	Symbol	Rating	Units
Continuous Forward Current	I_F	50	mA
Reverse Voltage	V_R	5	V
Operating Temperature	T_{opr}	-40 ~ +100	℃
Storage Temperature	T_{stg}	-40 ~ +100	℃
Soldering Temperature	T_{sol}	260	℃
Power Dissipation at(or below) 25℃ Free Air Temperature	P_d	100	mW

Notes: * Soldering time≦5 seconds.

Copyright © 2010, Everlight All Rights Reserved. Release Date : Aug.11.2017. Issue No: DIR-0001661 Rev.3

Ver.:3 Release Date:08/21/2017 狀態:Approved(正式發行)

Electro-Optical Characteristics (Ta=25℃)

Parameter	Symbol	Min.	Typ.	Max.	Unit	Condition
Radiant Intensity	Ie	0.5	2.35	--	mW /sr	I_F=20mA
Peak Wavelength	λp	--	940	--	nm	I_F=20mA
Spectral Bandwidth	Δλ	--	45	--	nm	I_F=20mA
Forward Voltage	V_F	--	1.5	1.9	V	I_F=20mA
Reverse Current	I_R	--	--	10	μA	V_R=5V
View Angle	$2\theta_{1/2}$	--	120	--	deg	I_F =20mA

EVERLIGHT

Copyright © 2010, Everlight All Rights Reserved. Release Date : Aug.11.2017. Issue No: DIR-0001661 Rev.3
Ver.:3 Release Date:08/21/2017 狀態:Approved(正式發行)

Typical Electrical/Optical/Characteristics Curves for IR

Forward Current vs. Ambient Temperature

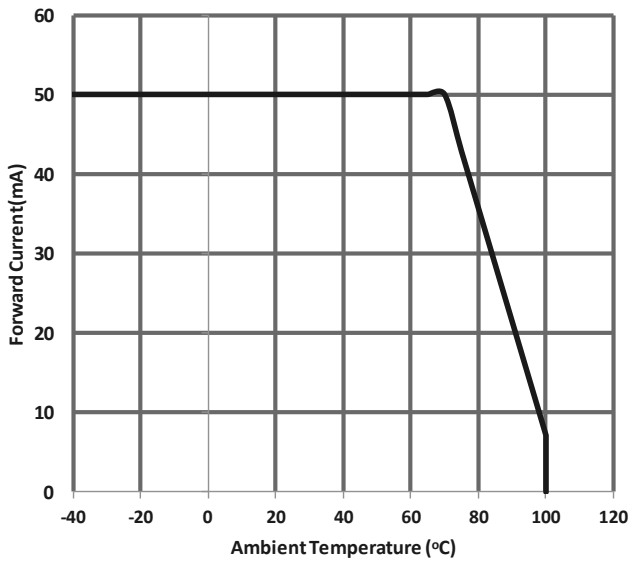

Spectral Distribution

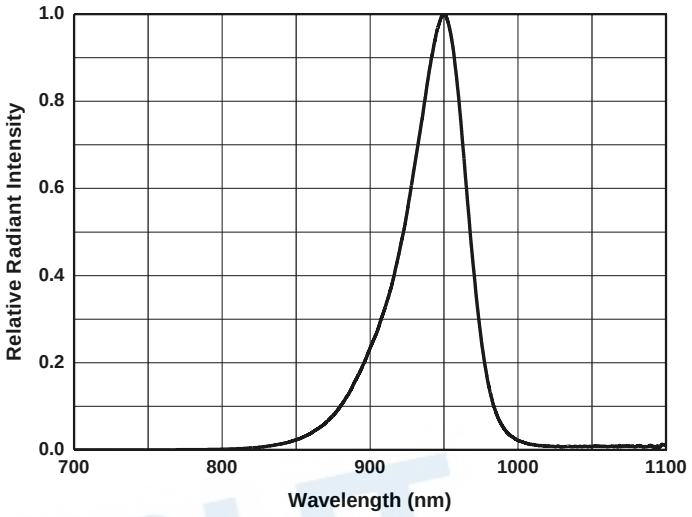

Relative Intensity vs. Forward Current

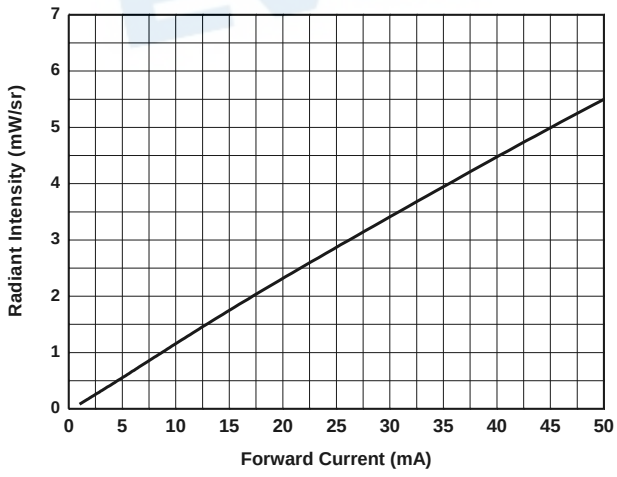

Forward Current vs. Forward Voltage

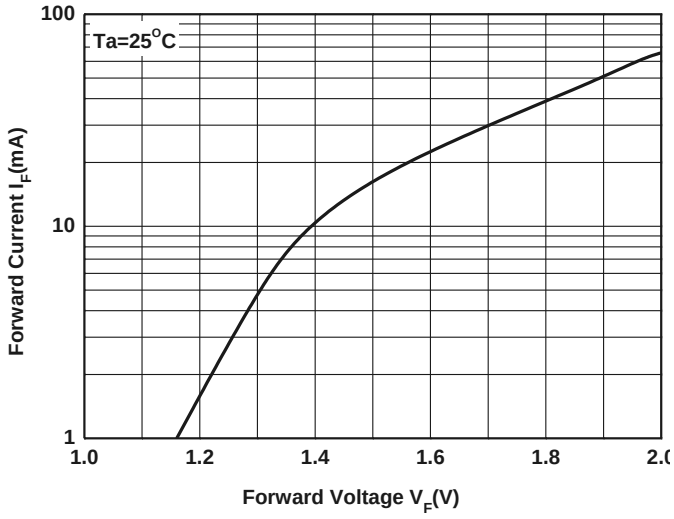

Copyright © 2010, Everlight All Rights Reserved. Release Date : Aug.11.2017. Issue No: DIR-0001661 Rev.3

Ver.:3 Release Date:08/21/2017 狀態:Approved(正式發行)

Relative Radiant Intensity vs. Angular Displacement

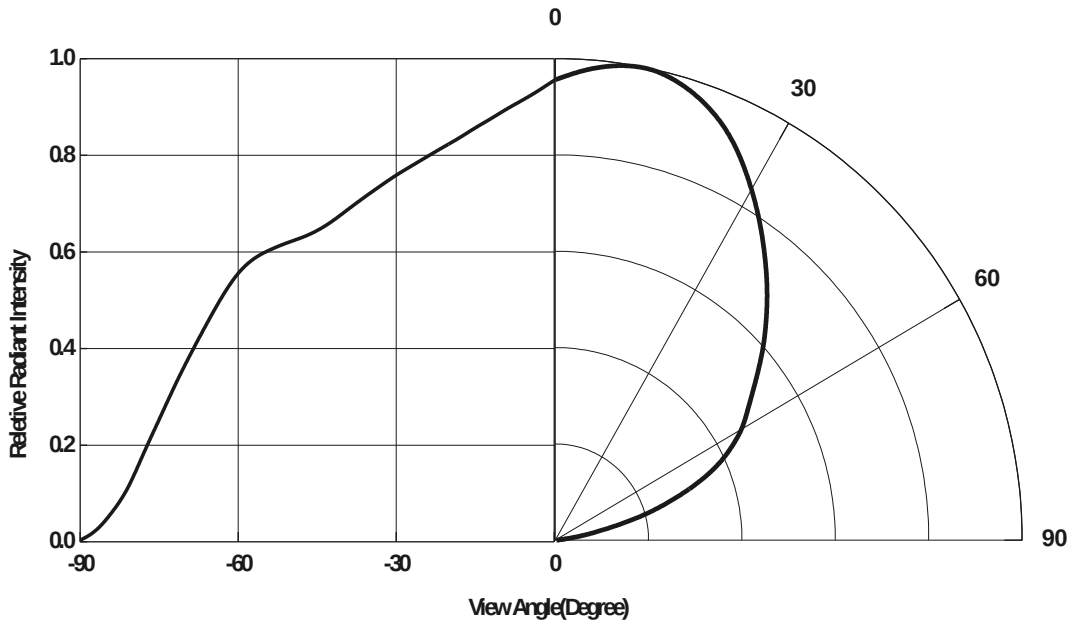

EVERLIGHT

Copyright © 2010, Everlight All Rights Reserved. Release Date : Aug.11.2017. Issue No: DIR-0001661 Rev.3
Ver.:3 Release Date:08/21/2017 狀態:Approved(正式發行)

Precautions For Use

1. Over-current-proof
   Customer must apply resistors for protection , otherwise slight voltage shift will cause big current change (Burn out will happen).

2. Storage
   2.1 Do not open moisture proof bag before the products are ready to use.
   2.2 Before opening the package, the LEDs should be kept at 30℃ or less and 90%RH or less.
   2.3 The LEDs should be used within a year.
   2.4 After opening the package, the LEDs should be kept at 30℃ or less and 60%RH or less.
   2.5 The LEDs should be used within 168 hours (7 days) after opening the package.
   2.6 If the moisture absorbent material (silica gel) has faded away or the LEDs have exceeded the storage time, baking treatment should be performed using the following conditions.
   Baking treatment : 60±5℃ for Min. 24 hours.

3. Soldering Condition
   3.1 Pb-free solder temperature profile

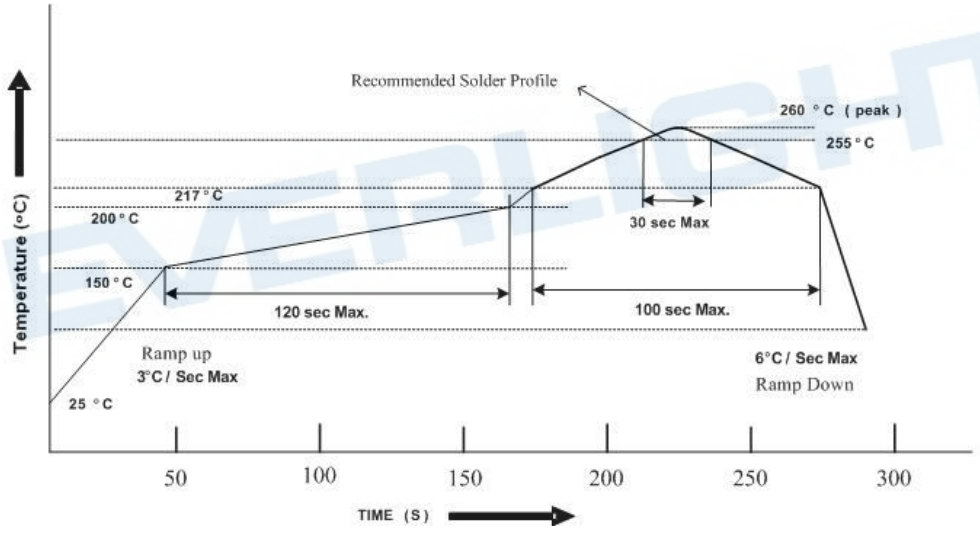

   3.2 Reflow soldering should not be done more than two times.
   3.3 When soldering, do not put stress on the LEDs during heating.
   3.4 After soldering, do not warp the circuit board.

Copyright © 2010, Everlight All Rights Reserved. Release Date : Aug.11.2017. Issue No: DIR-0001661 Rev.3
Ver.:3 Release Date:08/21/2017 狀態:Approved(正式發行)

4. Soldering Iron

Each terminal is to go to the tip of soldering iron temperature less than 350℃ for 3 seconds within once in less than the soldering iron capacity 25W. Leave two seconds and more intervals, and do soldering of each terminal. Be careful because the damage of the product is often started at the time of the hand solder.

5. Repairing

Repair should not be done after the LEDs have been soldered. When repairing is unavoidable, a double-head soldering iron should be used (as below figure). It should be confirmed beforehand whether the characteristics of the LEDs will or will not be damaged by repairing.

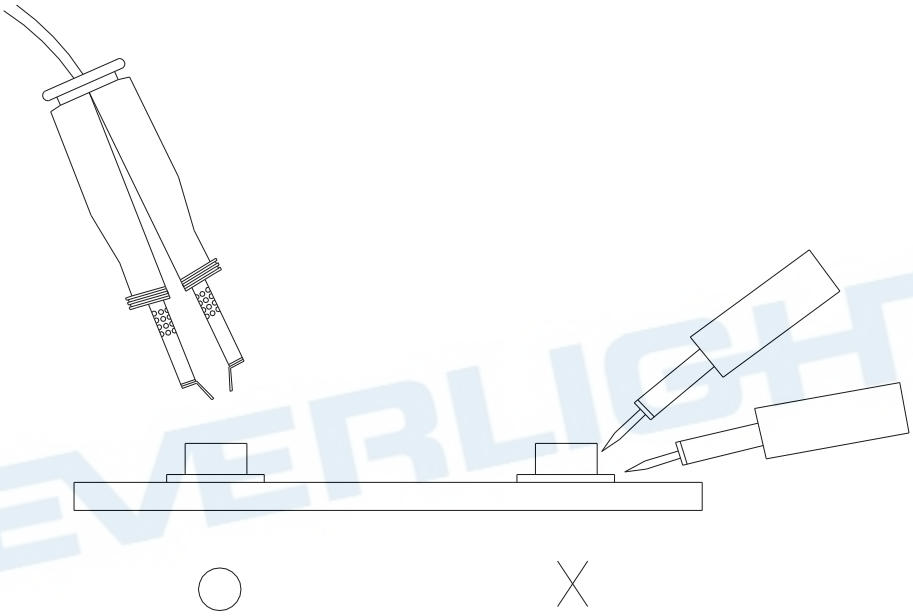

Copyright © 2010, Everlight All Rights Reserved. Release Date : Aug.11.2017. Issue No: DIR-0001661 Rev.3

Ver.:3 Release Date:08/21/2017 狀態:Approved(正式發行)

Package Dimensions

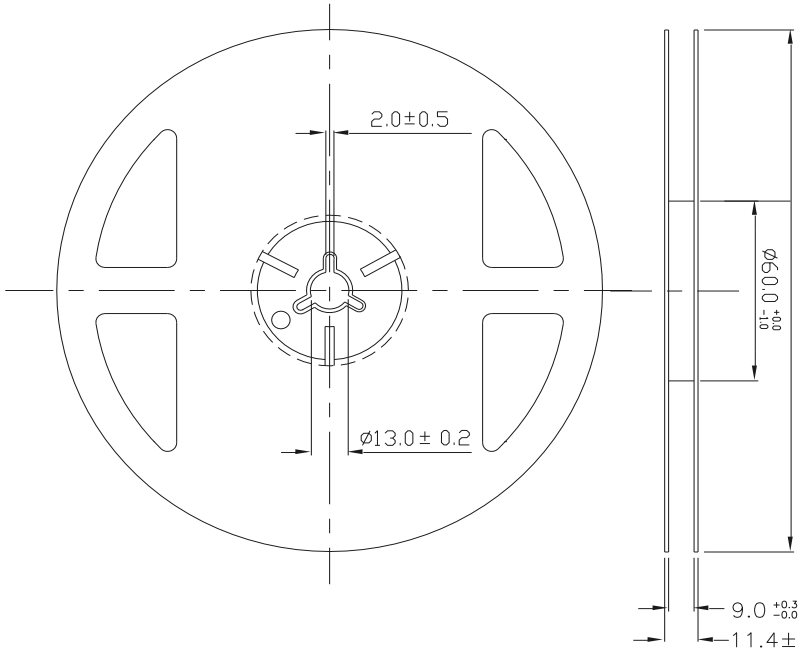

Note: The tolerances unless mentioned is ±0.1mm ,Unit = mm

Carrier Tape Dimensions:(Quantity: 3000pcs/reel)

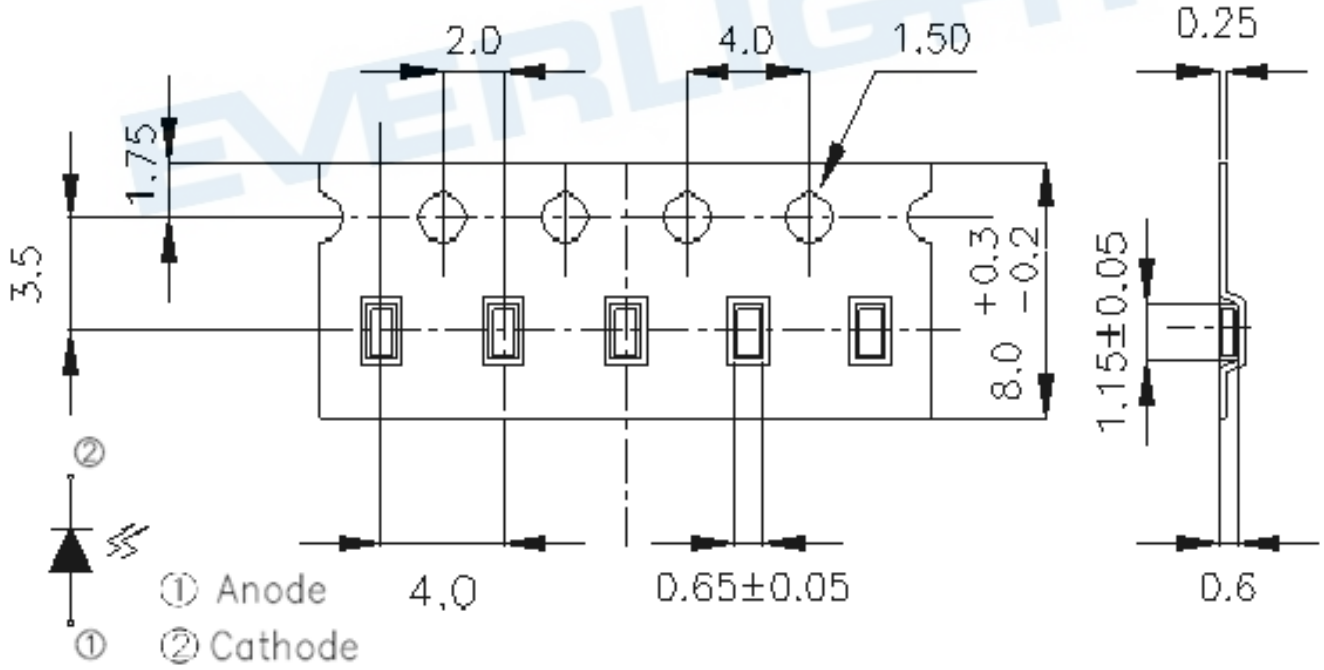

Note: The tolerances unless mentioned is ±0.1mm ,Unit = mm

Copyright © 2010, Everlight All Rights Reserved. Release Date : Aug.11.2017. Issue No: DIR-0001661 Rev.3

Ver.:3 Release Date:08/21/2017 狀態:Approved(正式發行)

Packing Procedure

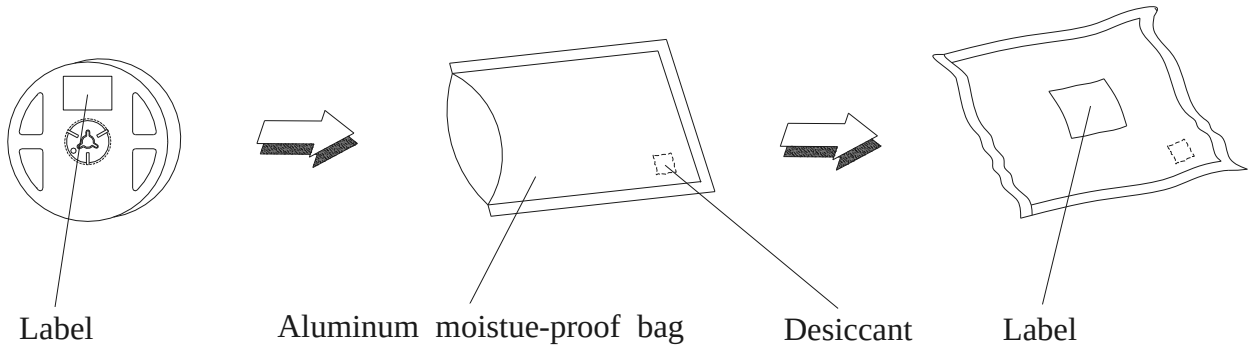

Label Form Specification

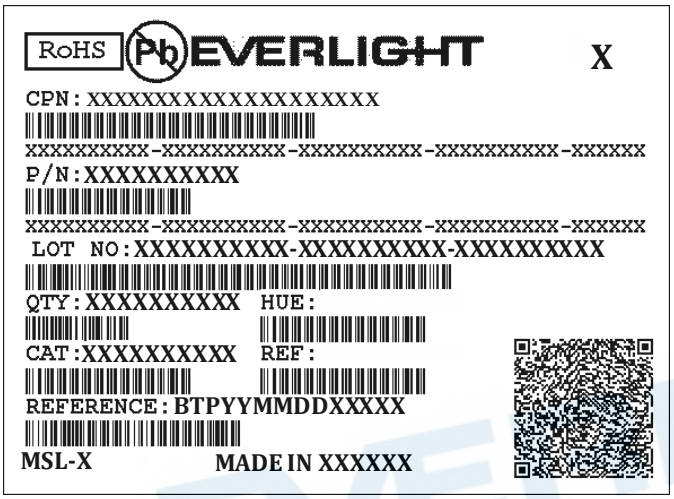

CPN: Customer's Production Number
P/N : Production Number
QTY: Packing Quantity
CAT: Ranks
HUE: Peak Wavelength
REF: Reference
LOT No: Lot Number
MADE IN TAIWAN: Production Place

DISCLAIMER

1. EVERLIGHT reserves the right(s) on the adjustment of product material mix for the specification.
2. The product meets EVERLIGHT published specification for a period of twelve (12) months from date of shipment.
3. The graphs shown in this datasheet are representing typical data only and do not show guaranteed values.
4. When using this product, please observe the absolute maximum ratings and the instructions for using outlined in these specification sheets. EVERLIGHT assumes no responsibility for any damage resulting from the use of the product which does not comply with the absolute maximum ratings and the instructions included in these specification sheets.
5. These specification sheets include materials protected under copyright of EVERLIGHT. Reproduction in any form is prohibited without obtaining EVERLIGHT's prior consent.
6. This product is not intended to be used for military, aircraft, automotive, medical, life sustaining or life saving applications or any other application which can result in human injury or death. Please contact authorized Everlight sales agent for special application request.

Copyright © 2010, Everlight All Rights Reserved. Release Date : Aug.11.2017. Issue No: DIR-0001661 Rev.3

Ver.:3 Release Date:08/21/2017 狀態:Approved(正式發行)