SNx4ACT245 具有三态输出的八通道总线收发器

1 特性

- V_{CC} 工作范围为 4.5V 至 5.5V
- 输入电压高达 5.5V
- 5V 时，t_{pd} 最大值为 8ns
- 输入兼容 TTL 电压

2 应用

- 专业音频
- 视频和标牌
- 电器
- 工厂自动化与控制

3 说明

'AC245 八通道总线收发器专为数据总线之间的异步双向通信而设计。控制功能的实施可更大限度地降低外部时序要求。

器件信息

器件型号	封装(1)	封装尺寸(2)	本体尺寸(3)
SNx4ACT245	DB（SSOP，20）	7.2mm × 7.8mm	7.2mm × 5.3mm
	DGS（VSSOP，20）	5.1mm × 4.9mm	5.1mm × 3mm
	DW（SOIC，20）	12.8mm × 10.3mm	12.8mm × 7.5mm
	N（PDIP，20）	24.33mm × 9.4mm	24.33mm × 6.35mm
	NS（SO，20）	12.6mm × 7.8mm	12.6mm × 5.3mm
	PW（TSSOP，20）	6.5mm × 6.4mm	6.5mm × 4.4mm
	RKS（VQFN，20）	4.5mm × 2.5mm	4.5mm × 2.5mm

(1) 有关更多信息，请参阅第 11 节。
(2) 封装尺寸（长 × 宽）为标称值，并包括引脚（如适用）。
(3) 本体尺寸（长 × 宽）为标称值，不包括引脚。

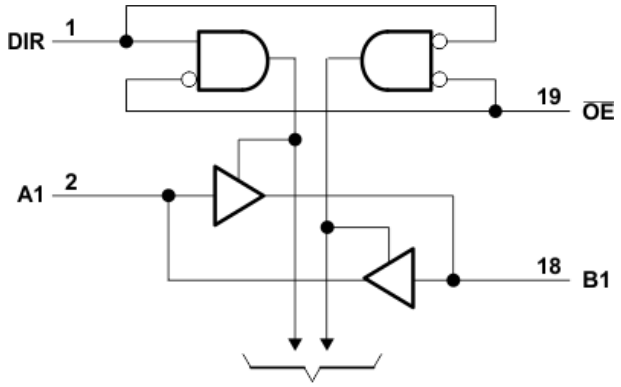

逻辑图（正逻辑）

Table of Contents

1 特性 1
2 应用 1
3 说明 1
4 Pin Configuration and Functions 3
5 Specifications 5
5.1 Absolute Maximum Ratings 5
5.2 ESD Ratings 5
5.3 Recommended Operating Conditions 5
5.4 Thermal Information 5
5.5 Electrical Characteristics 6
5.6 Switching Characteristics 6
5.7 Operating Characteristics 6
5.8 Typical Characteristics 7
6 Parameter Measurement Information 8
7 Detailed Description 9
7.1 Overview 9
7.2 Functional Block Diagram 9
7.3 Feature Description 9
7.4 Device Functional Modes 9
8 应用信息免责声明 10
8.1 Application Information 10
8.2 Typical Application 10
8.3 Power Supply Recommendations 11
8.4 Layout 11
9 Device and Documentation Support 12
9.1 Documentation Support 12
9.2 接收文档更新通知 12
9.3 支持资源 12
9.4 Trademarks 12
9.5 静电放电警告 12
9.6 术语表 12
10 Revision History 13
11 Mechanical, Packaging, and Orderable Information 13

Copyright © 2024 Texas Instruments Incorporated

4 Pin Configuration and Functions

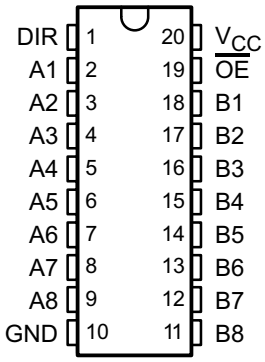

图 4-1. SN54ACT245 J or W Package; SN74ACT245 DB, DGS, DW, N, NS, or PW Package Top View

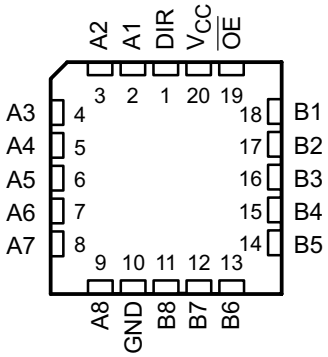

图 4-2. SN54ACT245 FK Package Top View

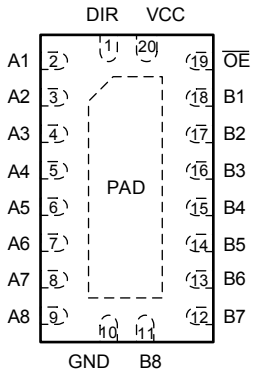

图 4-3. SN54ACT245 RKS Package Top View

Copyright © 2024 Texas Instruments Incorporated

Pin Functions

PIN		TYPE[1]	DESCRIPTION
NO.	NAME		
1	DIR	I/O	Direction Pin
2	A1	I/O	A1 Input/Output
3	A2	I/O	A2 Input/Output
4	A3	I/O	A3 Input/Output
5	A4	I/O	A4 Input/Output
6	A5	I/O	A5 Input/Output
7	A6	I/O	A6 Input/Output
8	A7	I/O	A7 Input/Output
9	A8	I/O	A8 Input/Output
10	GND	—	Ground Pin
11	B8	I/O	B8 Input/Output
12	B7	I/O	B7 Input/Output
13	B6	I/O	B6 Input/Output
14	B5	I/O	B5 Input/Output
15	B4	I/O	B4 Input/Output
16	B3	I/O	B3 Input/Output
17	B2	I/O	B2 Input/Output
18	B1	I/O	B1 Input/Output
19	OE	I/O	Output Enable
20	VCC	—	Power Pin

(1) Signal Types: I = Input, O = Output, I/O = Input or Output

Copyright © 2024 Texas Instruments Incorporated

5 Specifications

5.1 Absolute Maximum Ratings

over operating free-air temperature range (unless otherwise noted)

			MIN	MAX	UNIT
V_{CC}	Supply voltage		–0.5	7	V
V_I	Input voltage (1)		–0.5	V_{CC} + 0.5	V
V_O	Output voltage (1)		–0.5	V_{CC} + 0.5	V
I_{IK}	Input clamp current	V_I < 0 or V_I > V_{CC}		±20	mA
I_{OK}	Output clamp current	V_O < 0 or V_O > V_{CC}		±20	mA
I_O	Continuous output current	V_O = 0 to V_{CC}		±50	mA
	Continuous current through V_{CC} or GND			±200	mA
T_{stg}	Storage temperature range		–65	150	°C

(1) The input and output voltage ratings may be exceeded if the input and output current ratings are observed.

5.2 ESD Ratings

			VALUE	UNIT
$V_{(ESD)}$	Electrostatic discharge	Human body model (HBM), per ANSI/ESDA/JEDEC JS-001(1)	±3000	V
		Charged-device model (CDM), per JEDEC specification JESD22-C101(2)	±1000	

(1) JEDEC document JEP155 states that 500-V HBM allows safe manufacturing with a standard ESD control process.
(2) JEDEC document JEP157 states that 250-V CDM allows safe manufacturing with a standard ESD control process.

5.3 Recommended Operating Conditions

		SN54ACT245		SN74ACT245		UNIT
		MIN	MAX	MIN	MAX	
V_{CC}	Supply voltage	4.5	5.5	4.5	5.5	V
V_{IH}	High-level input voltage	2		2		V
V_{IL}	Low-level input voltage		0.8		0.8	V
V_I	Input voltage	0	V_{CC}	0	V_{CC}	V
V_O	Output voltage	0	V_{CC}	0	V_{CC}	V
I_{OH}	High-level output current		–24		–24	mA
I_{OL}	Low-level output current		24		24	mA
Δt/Δv	Input transition rise or fall rate		8		8	ns/V
T_A	Operating free-air temperature	–55	125	–40	85	°C

5.4 Thermal Information

THERMAL METRIC(1)		SNx4ACT245							UNIT
		DB (SSOP)	DGS (VSSOP)	DW (SOIC)	N (PDIP)	NS (SOP)	PW (TSSOP)	RKS (VQFN)	
		20 PINS							
$R_{\theta JA}$	Junction-to-ambient thermal resistance	105.4	123.5	98.6	69	99.7	126.6	67.7	°C/W

(1) For more information about traditional and new thermal metrics, see the *Semiconductor and IC Package Thermal Metrics* application report, SPRA953.

Copyright © 2024 Texas Instruments Incorporated

5.5 Electrical Characteristics

over recommended operating free-air temperature range (unless otherwise noted)

PARAMETER		TEST CONDITIONS	V_{CC}	T_A = 25°C			SN54ACT245		SN74ACT245		UNIT
				MIN	TYP	MAX	MIN	MAX	MIN	MAX	
V_{OH}		I_{OH} = –50 µA	4.5 V	4.4	4.49		4.4		4.4		V
			5.5 V	5.4	5.49		5.4		5.4		
		I_{OH} = –24 mA	4.5 V	3.88			3.7		3.76		
			5.5 V	4.86			4.7		4.76		
		I_{OH} = –50 mA(1)	5.5 V				3.85				
		I_{OH} = –75 mA(1)	5.5 V						3.85		
V_{OL}		I_{OL} = 50 µA	4.5 V		0.001	0.1		0.1		0.1	V
			5.5 V		0.001	0.1		0.1		0.1	
		I_{OL} = 24 mA	4.5 V			0.36		0.5		0.44	
			5.5 V			0.36		0.5		0.44	
		I_{OL} = 50 mA(1)	5.5 V					1.65			
		I_{OL} = 75 mA(1)	5.5 V							1.65	
I_{OZ}	A or B ports(2)	V_O = V_{CC} or GND	5.5 V			±0.5		±10		±5	µA
I_I	$\overline{OE}$ or DIR	V_I = V_{CC} or GND	5.5 V			±0.1		±1		±1	µA
I_{CC}		V_I = V_{CC} or GND, I_O = 0	5.5 V			4		80		40	µA
ΔI_{CC} (3)		One input at 3.4 V, Other inputs at GND or V_{CC}	5.5 V		0.6			1.6		1.5	mA
C_i		V_I = V_{CC} or GND	5 V		4.5						pF
C_{io}		V_O = V_{CC} or GND	5 V		15						pF

(1) Not more than one output should be tested at a time, and the duration of the test should not exceed 2 ms.
(2) For I/O ports, the parameter I_{OZ} includes the input leakage current.
(3) This is the increase in supply current for each input that is at one of the specified TTL voltage levels, rather than 0 V or V_{CC}.

5.6 Switching Characteristics

over recommended operating free-air temperature range, V_{CC} = 5 V ± 0.5 V (unless otherwise noted) (see 图 6-1)

PARAMETER	FROM (INPUT)	TO (OUTPUT)	T_A = 25°C			SN54ACT245		SN74ACT245		UNIT
			MIN	TYP	MAX	MIN	MAX	MIN	MAX	
t_{PLH}	A or B	B or A	1	4	7.5	1	9	1.5	8	ns
t_{PHL}			1	4	8	1	10	1	9	
t_{PZH}	$\overline{OE}$	A or B	1	5	10	1	12	1.5	11	ns
t_{PZL}			1	5.5	10	1	13	1.5	12	
t_{PHZ}	$\overline{OE}$	A or B	1	5.5	10	1	12	1	11	ns
t_{PLZ}			1	5	10	1	12	1.5	11	

5.7 Operating Characteristics

V_{CC} = 5 V, T_A = 25°C

PARAMETER		TEST CONDITIONS		TYP	UNIT
C_{pd}	Power dissipation capacitance	C_L = 50 pF,	f = 1 MHz	45	pF

Copyright © 2024 Texas Instruments Incorporated

5.8 Typical Characteristics

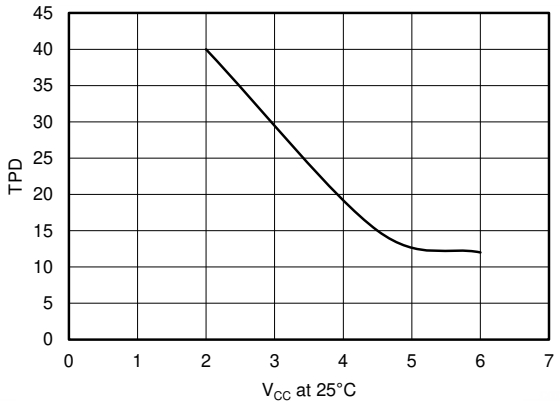

图 5-1. TPD vs V_{CC} at 25°C

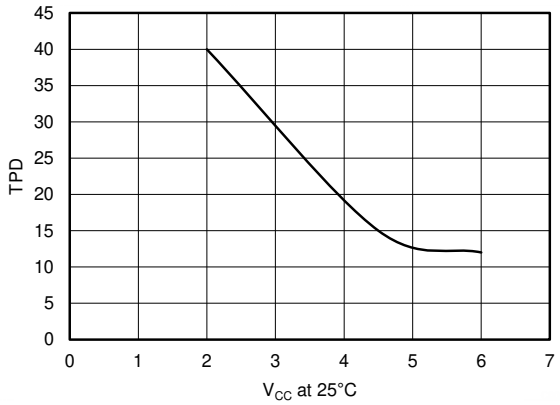

图 5-2. TPD vs V_{CC} at 25°C

6 Parameter Measurement Information

6.1

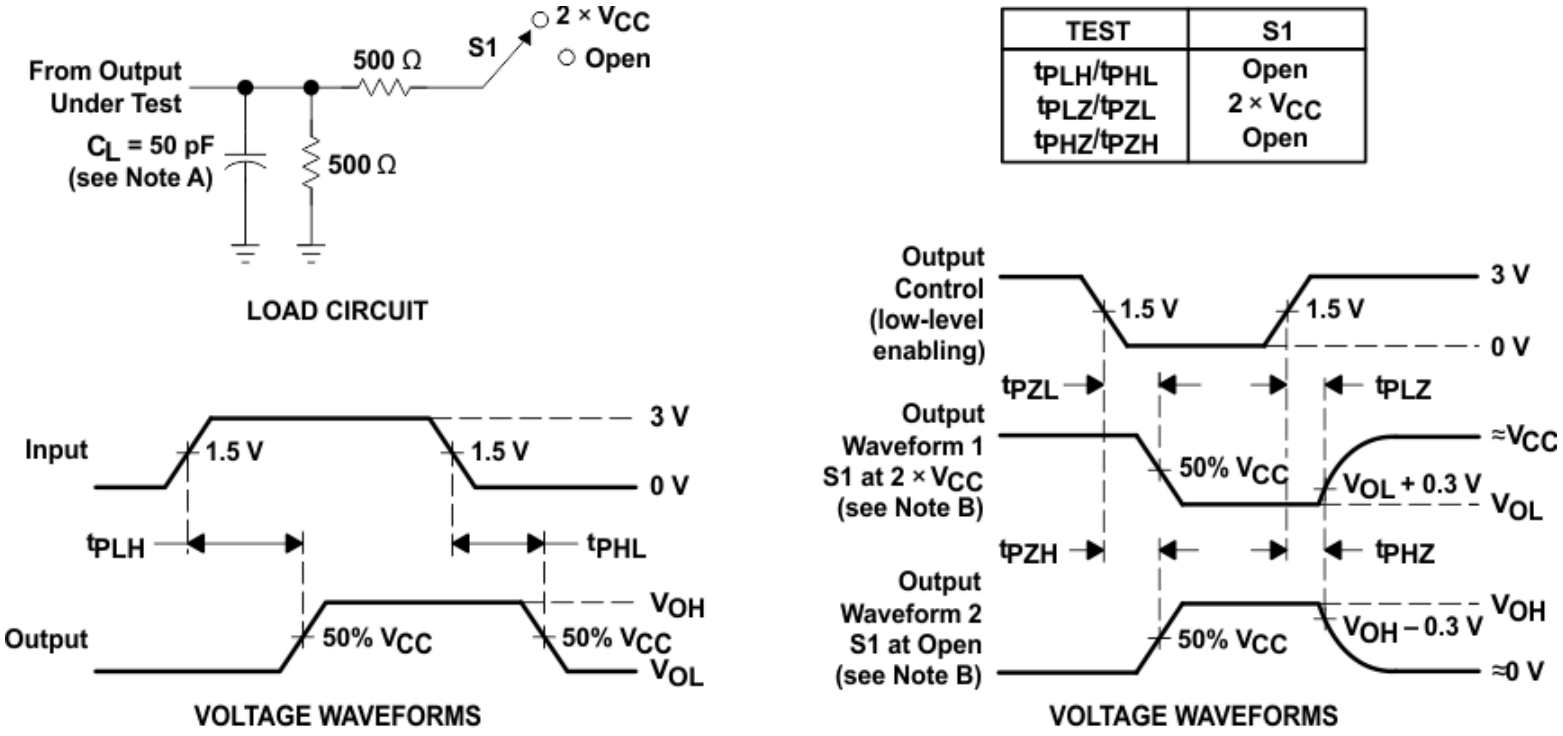

NOTES: A. C_L includes probe and jig capacitance.
B. Waveform 1 is for an output with internal conditions such that the output is low except when disabled by the output control. Waveform 2 is for an output with internal conditions such that the output is high except when disabled by the output control.
C. All input pulses are supplied by generators having the following characteristics: PRR ≤ 1 MHz, Z_O = 50 Ω, t_r ≤2.5 ns, t_f ≤2.5 ns.
D. The outputs are measured one at a time with one input transition per measurement.

图 6-1. Load Circuit and Voltage Waveforms

Copyright © 2024 Texas Instruments Incorporated

7 Detailed Description

7.1 Overview

These octal bus transceivers are designed for asynchronous two-way communication between data buses. The control-function implementation minimizes external timing requirements.

When the output-enable ($\overline{OE}$) is low, the device passes noninverted data from the A bus to the B bus or from the B bus to the A bus, depending upon the logic level at the direction-control (DIR) input. A high on $\overline{OE}$ disables the device so that the buses are effectively isolated.

To ensure the high-impedance state during power up or power down, $\overline{OE}$ should be tied to V_{CC} through a pullup resistor; the minimum value of the resistor is determined by the current-sinking capability of the driver.

7.2 Functional Block Diagram

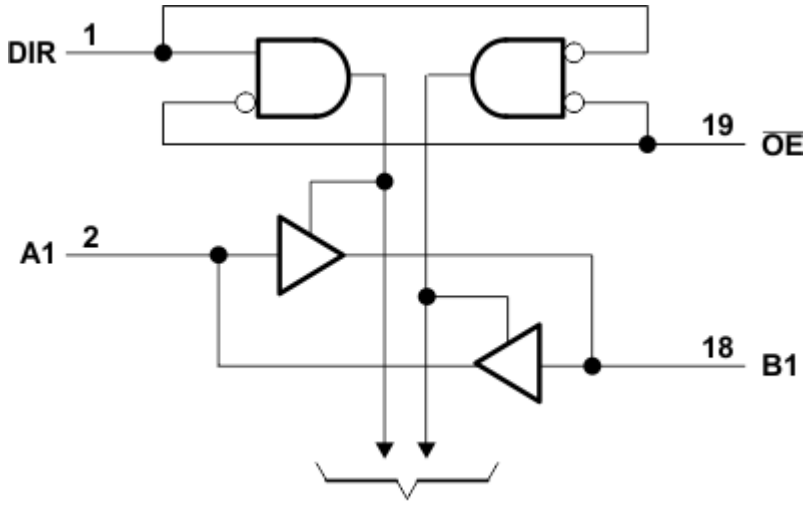

Logic Diagram (Positive Logic)

7.3 Feature Description

The SNx4ACT245 devices have a wide operating V_{CC} range from 4.5 V to 5.5 V with slower edge rates to minimize output ringing.

7.4 Device Functional Modes

节 7.4 lists the function modes of the SNx4ACT245.

表 7-1. Function Table

INPUTS(1)		OPERATION
$\overline{OE}$	DIR	
L	L	B data to A bus
L	H	A data to B bus
H	X	Isolation

(1) H = High Voltage Level, L = Low Voltage Level, X = Don't Care

Copyright © 2024 Texas Instruments Incorporated

8 应用信息免责声明

备注

以下应用部分中的信息不属于 TI 器件规格的范围，TI 不担保其准确性和完整性。TI 的客 户应负责确定器件是否适用于其应用。客户应验证并测试其设计，以确保系统功能。

8.1 Application Information

The SNx4ACT245 is a low-drive CMOS device that can be used for a multitude of bus interface type applications where output ringing is a concern. The low drive and slow edge rates will minimize overshoot and undershoot on the outputs.

8.2 Typical Application

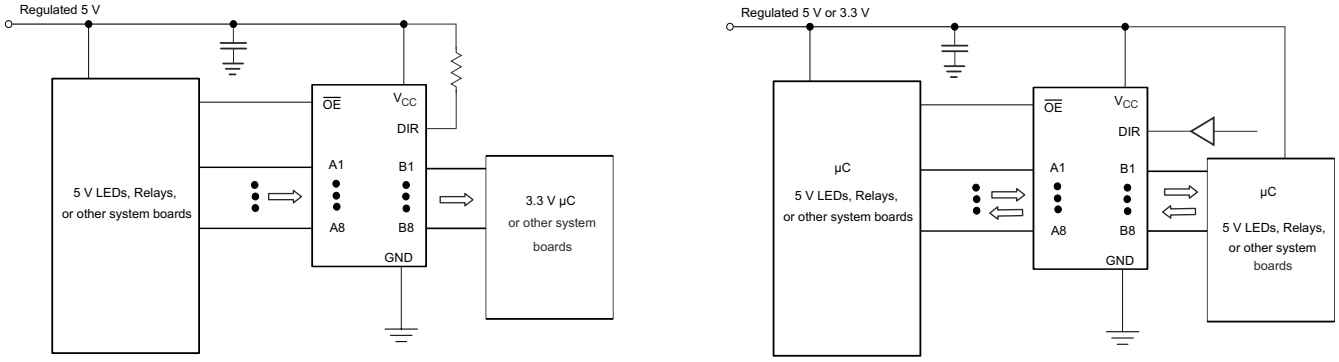

图 8-1. Typical Application Schematic

8.2.1 Design Requirements

This device uses CMOS technology and has balanced output drive. Care should be taken to avoid bus contention because it can drive currents that would exceed maximum limits. The high drive will also create fast edges into light loads, so routing and load conditions should be considered to prevent ringing.

8.2.2 Detailed Design Procedure

1. Recommended Input Conditions
   - For rise time and fall time specifications, see Δt/ΔV in the *节 5.3* table.
   - For specified High and low levels, see V_{IH} and V_{IL} in the *节 5.3* table.
   - Inputs are overvoltage tolerant allowing them to go as high as 5.5 V at any valid V_{CC}.
2. Recommend Output Conditions
   - Load currents should not exceed 35 mA per output and 70 mA total for the part.
   - Outputs should not be pulled above V_{CC}.

Copyright © 2024 Texas Instruments Incorporated

8.2.3 Application Curve

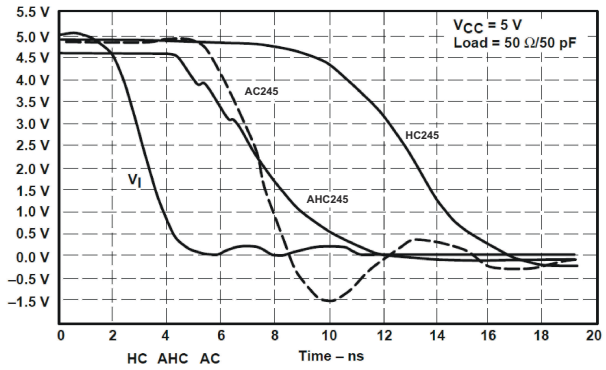

图 8-2. Switching Characteristics Comparison

8.3 Power Supply Recommendations

The power supply can be any voltage between the MIN and MAX supply voltage rating located in the *节 5.3*.

Each V_{CC} pin should have a good bypass capacitor to prevent power disturbance. For devices with a single supply, 0.1 µF is recommended; if there are multiple V_{CC} pins, then 0.01 µF or 0.022 µF is recommended for each power pin. It is acceptable to parallel multiple bypass caps to reject different frequencies of noise. A 0.1 µF and a 1 µF are commonly used in parallel. The bypass capacitor should be installed as close to the power pin as possible for best results.

8.4 Layout

8.4.1 Layout Guidelines

When using multiple-bit logic devices, inputs should never float.

In many cases, functions or parts of functions of digital logic devices are unused, for example, when only two inputs of a triple-input AND gate are used or only 3 of the 4 buffer gates are used. Such input pins should not be left unconnected because the undefined voltages at the outside connections result in undefined operational states. 节 8.4.2 specifies the rules that must be observed under all circumstances. All unused inputs of digital logic devices must be connected to a high or low bias to prevent them from floating. The logic level that should be applied to any particular unused input depends on the function of the device. Generally they will be tied to GND or V_{CC}, whichever makes more sense or is more convenient. It is generally acceptable to float outputs, unless the part is a transceiver. If the transceiver has an output enable pin, it will disable the output section of the part when asserted. This will not disable the input section of the IOs, so they cannot float when disabled.

8.4.2 Layout Example

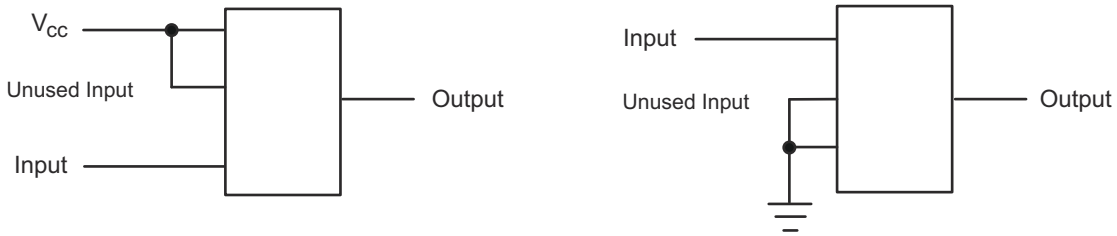

图 8-3. Layout Diagram

9 Device and Documentation Support

9.1 Documentation Support

9.1.1 Related Links

The table below lists quick access links. Categories include technical documents, support and community resources, tools and software, and quick access to sample or buy.

表 9-1. Related Links

PARTS	PRODUCT FOLDER	SAMPLE & BUY	TECHNICAL DOCUMENTS	TOOLS & SOFTWARE	SUPPORT & COMMUNITY
SN54ACT245	Click here	Click here	Click here	Click here	Click here
SN74ACT245	Click here	Click here	Click here	Click here	Click here

9.2 接收文档更新通知

要接收文档更新通知，请导航至 ti.com 上的器件产品文件夹。点击*通知*进行注册，即可每周接收产品信息更改摘要。有关更改的详细信息，请查看任何已修订文档中包含的修订历史记录。

9.3 支持资源

TI E2E™ 中文支持论坛是工程师的重要参考资料，可直接从专家处获得快速、经过验证的解答和设计帮助。搜索现有解答或提出自己的问题，获得所需的快速设计帮助。

链接的内容由各个贡献者“按原样”提供。这些内容并不构成 TI 技术规范，并且不一定反映 TI 的观点；请参阅 TI 的使用条款。

9.4 Trademarks

TI E2E™ is a trademark of Texas Instruments.
所有商标均为其各自所有者的财产。

9.5 静电放电警告



静电放电 (ESD) 会损坏这个集成电路。德州仪器 (TI) 建议通过适当的预防措施处理所有集成电路。如果不遵守正确的处理和安装程序，可能会损坏集成电路。

ESD 的损坏小至导致微小的性能降级，大至整个器件故障。精密的集成电路可能更容易受到损坏，这是因为非常细微的参数更改都可能会导致器件与其发布的规格不相符。

9.6 术语表

TI 术语表　　本术语表列出并解释了术语、首字母缩略词和定义。

Copyright © 2024 Texas Instruments Incorporated

10 Revision History

注：以前版本的页码可能与当前版本的页码不同

Changes from Revision G (March 2024) to Revision H (April 2024)	Page
• Updated RθJA values: DB = 70 to 105.4, DW = 58 to 98.6, NS = 60 to 99.7, PW = 83 to 126.6, all values in °C/W	5

Changes from Revision F (January 2023) to Revision G (March 2024)	Page
• 向*器件信息* 表、*引脚配置和功能* 部分和*热性能信息* 表中添加了 DGS 和 RKS 封装	1
• 将*封装信息* 更改为*器件信息* 并向表中添加了封装尺寸	1

11 Mechanical, Packaging, and Orderable Information

The following pages include mechanical, packaging, and orderable information. This information is the most current data available for the designated devices. This data is subject to change without notice and revision of this document. For browser-based versions of this data sheet, refer to the left-hand navigation.

Copyright © 2024 Texas Instruments Incorporated

PACKAGING INFORMATION

Orderable part number	Status (1)	Material type (2)	Package | Pins	Package qty | Carrier	RoHS (3)	Lead finish/ Ball material (4)	MSL rating/ Peak reflow (5)	Op temp (°C)	Part marking (6)
5962-8766301M2A	NRND	Production	LCCC (FK) | 20	55 | TUBE	No	SNPB	N/A for Pkg Type	-55 to 125	5962-8766301M2A SNJ54ACT245FK
5962-8766301MRA	NRND	Production	CDIP (J) | 20	20 | TUBE	No	SNPB	N/A for Pkg Type	-55 to 125	5962-8766301MRA SNJ54ACT245J
5962-8766301MSA	Active	Production	CFP (W) | 20	25 | TUBE	No	SNPB	N/A for Pkg Type	-55 to 125	5962-8766301MSA SNJ54ACT245W
SN74ACT245DBR	Active	Production	SSOP (DB) | 20	2000 | LARGE T&R	Yes	NIPDAU	Level-1-260C-UNLIM	-40 to 85	(ACT245, AD245)
SN74ACT245DBR.A	Active	Production	SSOP (DB) | 20	2000 | LARGE T&R	Yes	NIPDAU	Level-1-260C-UNLIM	-40 to 85	(ACT245, AD245)
SN74ACT245DGSR	Active	Production	VSSOP (DGS) | 20	5000 | LARGE T&R	Yes	NIPDAU	Level-1-260C-UNLIM	-40 to 85	ACT245
SN74ACT245DGSR.A	Active	Production	VSSOP (DGS) | 20	5000 | LARGE T&R	Yes	NIPDAU	Level-1-260C-UNLIM	-40 to 85	ACT245
SN74ACT245DWR	Active	Production	SOIC (DW) | 20	2000 | LARGE T&R	Yes	NIPDAU	Level-1-260C-UNLIM	-40 to 85	ACT245
SN74ACT245DWR.A	Active	Production	SOIC (DW) | 20	2000 | LARGE T&R	Yes	NIPDAU	Level-1-260C-UNLIM	-40 to 85	ACT245
SN74ACT245DWRE4	Active	Production	SOIC (DW) | 20	2000 | LARGE T&R	Yes	NIPDAU	Level-1-260C-UNLIM	-40 to 85	ACT245
SN74ACT245DWRG4	Active	Production	SOIC (DW) | 20	2000 | LARGE T&R	Yes	NIPDAU	Level-1-260C-UNLIM	-40 to 85	ACT245
SN74ACT245N	Active	Production	PDIP (N) | 20	20 | TUBE	Yes	NIPDAU	N/A for Pkg Type	-40 to 85	SN74ACT245N
SN74ACT245N.A	Active	Production	PDIP (N) | 20	20 | TUBE	Yes	NIPDAU	N/A for Pkg Type	-40 to 85	SN74ACT245N
SN74ACT245NE4	Active	Production	PDIP (N) | 20	20 | TUBE	Yes	NIPDAU	N/A for Pkg Type	-40 to 85	SN74ACT245N
SN74ACT245NS	Obsolete	Production	SOP (NS) | 20	-	-	Call TI	Call TI	-40 to 85	ACT245
SN74ACT245NSR	Active	Production	SOP (NS) | 20	2000 | LARGE T&R	Yes	NIPDAU	Level-1-260C-UNLIM	-40 to 85	ACT245
SN74ACT245NSR.A	Active	Production	SOP (NS) | 20	2000 | LARGE T&R	Yes	NIPDAU	Level-1-260C-UNLIM	-40 to 85	ACT245
SN74ACT245PW	Obsolete	Production	TSSOP (PW) | 20	-	-	Call TI	Call TI	-40 to 85	AD245
SN74ACT245PWG4	Obsolete	Production	TSSOP (PW) | 20	-	-	Call TI	Call TI	-40 to 85	
SN74ACT245PWR	Active	Production	TSSOP (PW) | 20	2000 | LARGE T&R	Yes	NIPDAU	Level-1-260C-UNLIM	-40 to 85	(ACT245, AD245)
SN74ACT245PWR.A	Active	Production	TSSOP (PW) | 20	2000 | LARGE T&R	Yes	NIPDAU	Level-1-260C-UNLIM	-40 to 85	(ACT245, AD245)
SN74ACT245PWRG4	Active	Production	TSSOP (PW) | 20	2000 | LARGE T&R	Yes	NIPDAU	Level-1-260C-UNLIM	-40 to 85	(ACT245, AD245)
SN74ACT245RKSR	Active	Production	VQFN (RKS) | 20	3000 | LARGE T&R	Yes	NIPDAU	Level-1-260C-UNLIM	-40 to 85	ACT245
SN74ACT245RKSR.A	Active	Production	VQFN (RKS) | 20	3000 | LARGE T&R	Yes	NIPDAU	Level-1-260C-UNLIM	-40 to 85	ACT245

Orderable part number	Status (1)	Material type (2)	Package | Pins	Package qty | Carrier	RoHS (3)	Lead finish/ Ball material (4)	MSL rating/ Peak reflow (5)	Op temp (°C)	Part marking (6)
SNJ54ACT245FK	NRND	Production	LCCC (FK) | 20	55 | TUBE	No	SNPB	N/A for Pkg Type	-55 to 125	5962-8766301M2A SNJ54 ACT245FK
SNJ54ACT245FK.A	NRND	Production	LCCC (FK) | 20	55 | TUBE	No	SNPB	N/A for Pkg Type	-55 to 125	5962-8766301M2A SNJ54 ACT245FK
SNJ54ACT245J	NRND	Production	CDIP (J) | 20	20 | TUBE	No	SNPB	N/A for Pkg Type	-55 to 125	5962-8766301MRA SNJ54ACT245J
SNJ54ACT245J.A	NRND	Production	CDIP (J) | 20	20 | TUBE	No	SNPB	N/A for Pkg Type	-55 to 125	5962-8766301MRA SNJ54ACT245J
SNJ54ACT245W	Active	Production	CFP (W) | 20	25 | TUBE	No	SNPB	N/A for Pkg Type	-55 to 125	5962-8766301MSA SNJ54ACT245W
SNJ54ACT245W.A	Active	Production	CFP (W) | 20	25 | TUBE	No	SNPB	N/A for Pkg Type	-55 to 125	5962-8766301MSA SNJ54ACT245W

(1) **Status:** For more details on status, see our product life cycle.

(2) **Material type:** When designated, preproduction parts are prototypes/experimental devices, and are not yet approved or released for full production. Testing and final process, including without limitation quality assurance, reliability performance testing, and/or process qualification, may not yet be complete, and this item is subject to further changes or possible discontinuation. If available for ordering, purchases will be subject to an additional waiver at checkout, and are intended for early internal evaluation purposes only. These items are sold without warranties of any kind.

(3) **RoHS values:** Yes, No, RoHS Exempt. See the TI RoHS Statement for additional information and value definition.

(4) **Lead finish/Ball material:** Parts may have multiple material finish options. Finish options are separated by a vertical ruled line. Lead finish/Ball material values may wrap to two lines if the finish value exceeds the maximum column width.

(5) **MSL rating/Peak reflow:** The moisture sensitivity level ratings and peak solder (reflow) temperatures. In the event that a part has multiple moisture sensitivity ratings, only the lowest level per JEDEC standards is shown. Refer to the shipping label for the actual reflow temperature that will be used to mount the part to the printed circuit board.

(6) **Part marking:** There may be an additional marking, which relates to the logo, the lot trace code information, or the environmental category of the part.

Multiple part markings will be inside parentheses. Only one part marking contained in parentheses and separated by a "~" will appear on a part. If a line is indented then it is a continuation of the previous line and the two combined represent the entire part marking for that device.

Important Information and Disclaimer: The information provided on this page represents TI's knowledge and belief as of the date that it is provided. TI bases its knowledge and belief on information provided by third parties, and makes no representation or warranty as to the accuracy of such information. Efforts are underway to better integrate information from third parties. TI has taken and continues to take reasonable steps to provide representative and accurate information but may not have conducted destructive testing or chemical analysis on incoming materials and chemicals. TI and TI suppliers consider certain information to be proprietary, and thus CAS numbers and other limited information may not be available for release.

In no event shall TI's liability arising out of such information exceed the total purchase price of the TI part(s) at issue in this document sold by TI to Customer on an annual basis.

OTHER QUALIFIED VERSIONS OF SN54ACT245, SN74ACT245 :

- Catalog : SN74ACT245
- Automotive : SN74ACT245-Q1, SN74ACT245-Q1
- Military : SN54ACT245
- Space : SN54ACT245-SP

NOTE: Qualified Version Definitions:

- Catalog - TI's standard catalog product
- Automotive - Q100 devices qualified for high-reliability automotive applications targeting zero defects
- Military - QML certified for Military and Defense Applications
- Space - Radiation tolerant, ceramic packaging and qualified for use in Space-based application

TAPE AND REEL INFORMATION

REEL DIMENSIONS

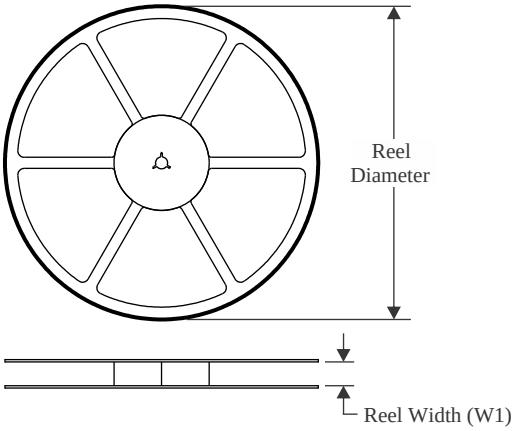

TAPE DIMENSIONS

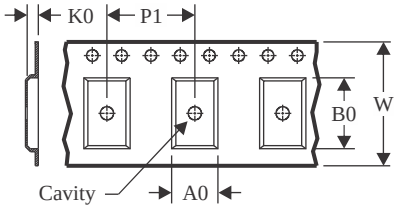

A0	Dimension designed to accommodate the component width
B0	Dimension designed to accommodate the component length
K0	Dimension designed to accommodate the component thickness
W	Overall width of the carrier tape
P1	Pitch between successive cavity centers

QUADRANT ASSIGNMENTS FOR PIN 1 ORIENTATION IN TAPE

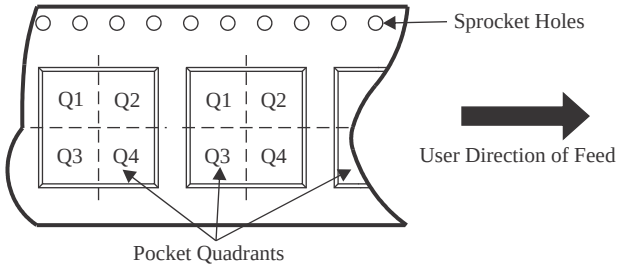

*All dimensions are nominal

Device	Package Type	Package Drawing	Pins	SPQ	Reel Diameter (mm)	Reel Width W1 (mm)	A0 (mm)	B0 (mm)	K0 (mm)	P1 (mm)	W (mm)	Pin1 Quadrant
SN74ACT245DBR	SSOP	DB	20	2000	330.0	16.4	8.2	7.5	2.5	12.0	16.0	Q1
SN74ACT245DGSR	VSSOP	DGS	20	5000	330.0	16.4	5.4	5.4	1.45	8.0	16.0	Q1
SN74ACT245DWR	SOIC	DW	20	2000	330.0	24.4	10.9	13.3	2.7	12.0	24.0	Q1
SN74ACT245NSR	SOP	NS	20	2000	330.0	24.4	8.4	13.0	2.5	12.0	24.0	Q1
SN74ACT245PWR	TSSOP	PW	20	2000	330.0	16.4	6.95	7.0	1.4	8.0	16.0	Q1
SN74ACT245RKSR	VQFN	RKS	20	3000	180.0	12.4	2.8	4.8	1.2	4.0	12.0	Q1

TAPE AND REEL BOX DIMENSIONS

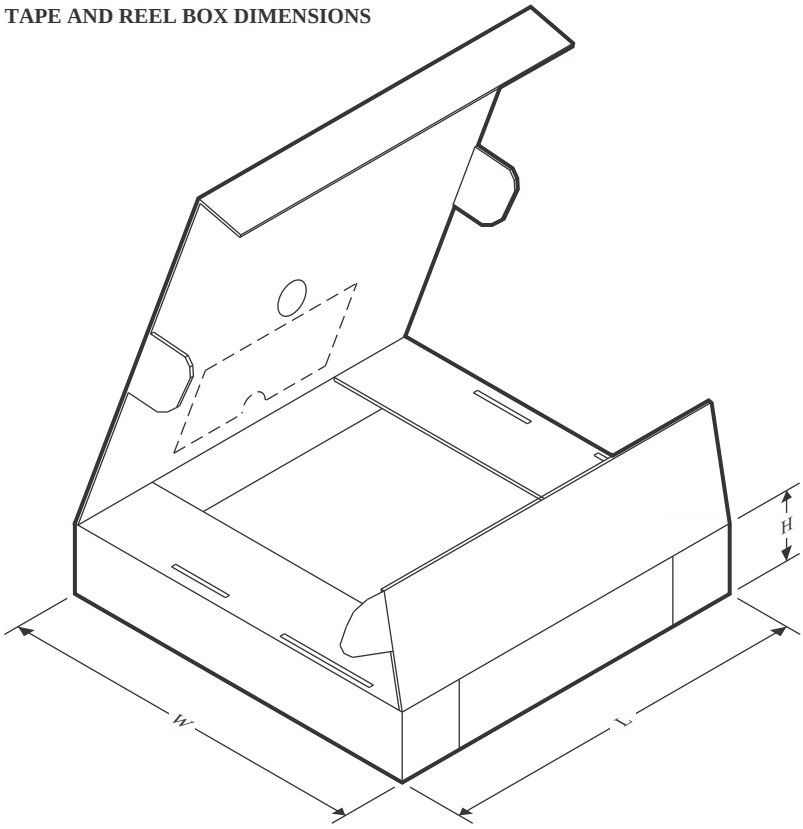

*All dimensions are nominal

Device	Package Type	Package Drawing	Pins	SPQ	Length (mm)	Width (mm)	Height (mm)
SN74ACT245DBR	SSOP	DB	20	2000	353.0	353.0	32.0
SN74ACT245DGSR	VSSOP	DGS	20	5000	353.0	353.0	32.0
SN74ACT245DWR	SOIC	DW	20	2000	356.0	356.0	45.0
SN74ACT245NSR	SOP	NS	20	2000	356.0	356.0	45.0
SN74ACT245PWR	TSSOP	PW	20	2000	353.0	353.0	32.0
SN74ACT245RKSR	VQFN	RKS	20	3000	210.0	185.0	35.0

TUBE

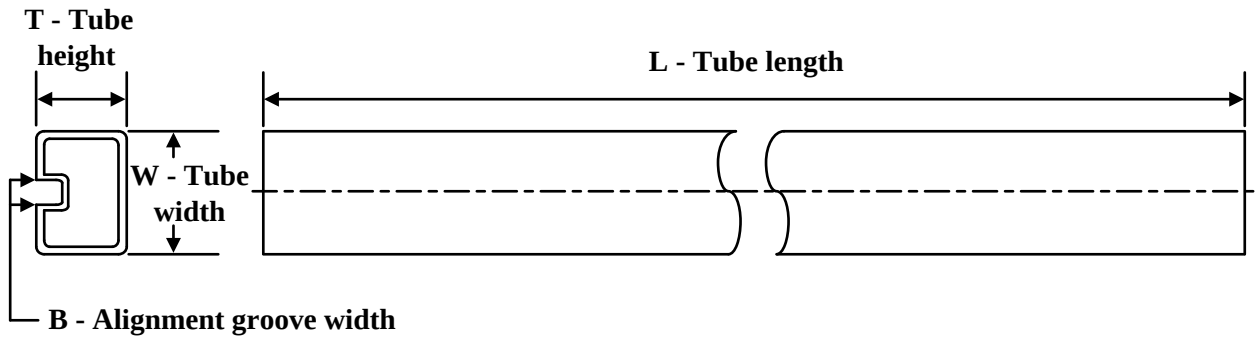

*All dimensions are nominal

Device	Package Name	Package Type	Pins	SPQ	L (mm)	W (mm)	T (µm)	B (mm)
5962-8766301M2A	FK	LCCC	20	55	506.98	12.06	2030	NA
5962-8766301MSA	W	CFP	20	25	506.98	26.16	6220	NA
SN74ACT245N	N	PDIP	20	20	506	13.97	11230	4.32
SN74ACT245N.A	N	PDIP	20	20	506	13.97	11230	4.32
SN74ACT245NE4	N	PDIP	20	20	506	13.97	11230	4.32
SNJ54ACT245FK	FK	LCCC	20	55	506.98	12.06	2030	NA
SNJ54ACT245FK.A	FK	LCCC	20	55	506.98	12.06	2030	NA
SNJ54ACT245W	W	CFP	20	25	506.98	26.16	6220	NA
SNJ54ACT245W.A	W	CFP	20	25	506.98	26.16	6220	NA

W (R–GDFP–F20) CERAMIC DUAL FLATPACK

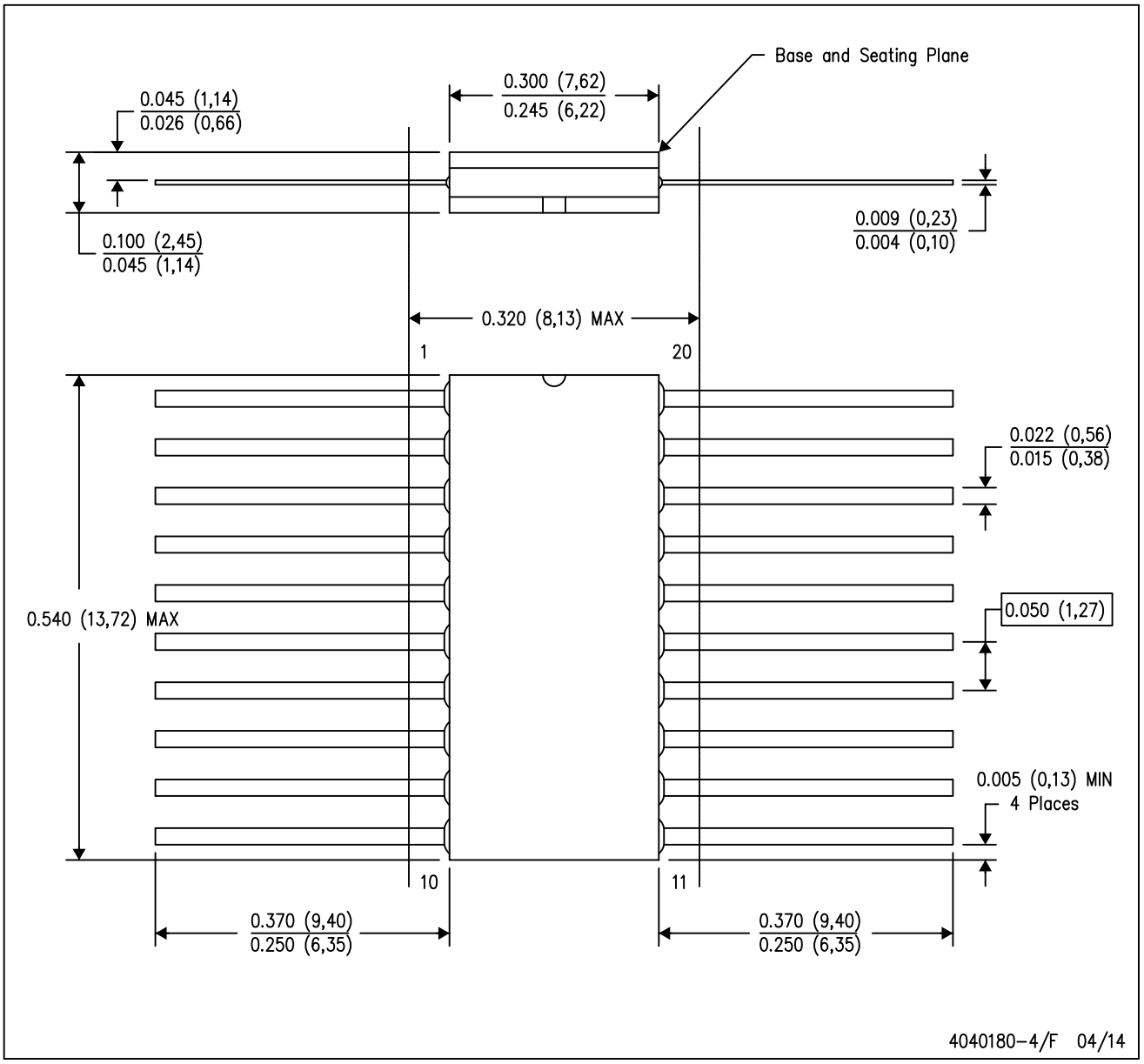

NOTES:
A. All linear dimensions are in inches (millimeters).
B. This drawing is subject to change without notice.
C. This package can be hermetically sealed with a ceramic lid using glass frit.
D. Index point is provided on cap for terminal identification only.
E. Falls within Mil–Std 1835 GDFP2–F20

PACKAGE OUTLINE

PW0020A

TSSOP - 1.2 mm max height

SMALL OUTLINE PACKAGE

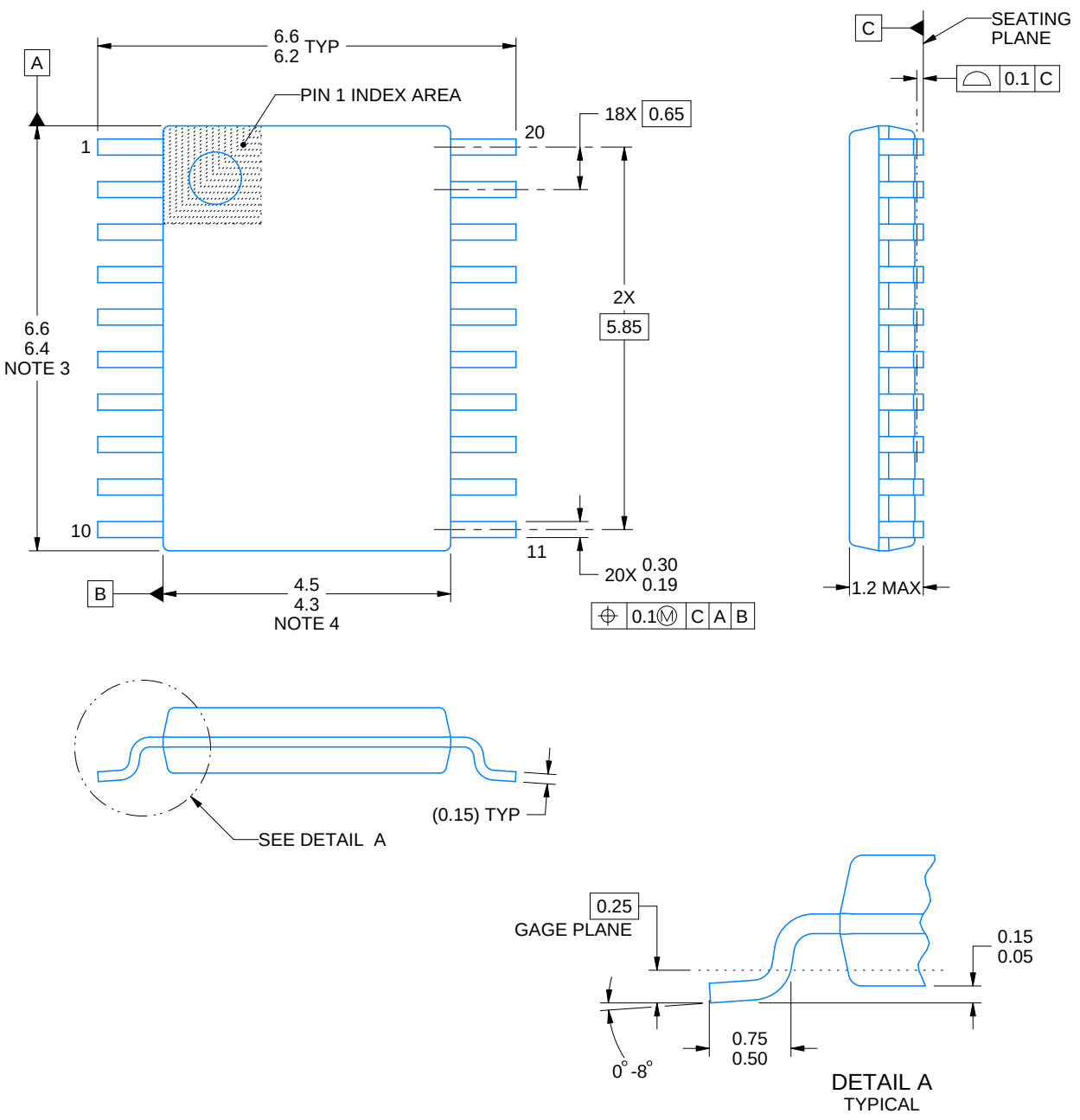

NOTES:

1. All linear dimensions are in millimeters. Any dimensions in parenthesis are for reference only. Dimensioning and tolerancing per ASME Y14.5M.
2. This drawing is subject to change without notice.
3. This dimension does not include mold flash, protrusions, or gate burrs. Mold flash, protrusions, or gate burrs shall not exceed 0.15 mm per side.
4. This dimension does not include interlead flash. Interlead flash shall not exceed 0.25 mm per side.
5. Reference JEDEC registration MO-153.

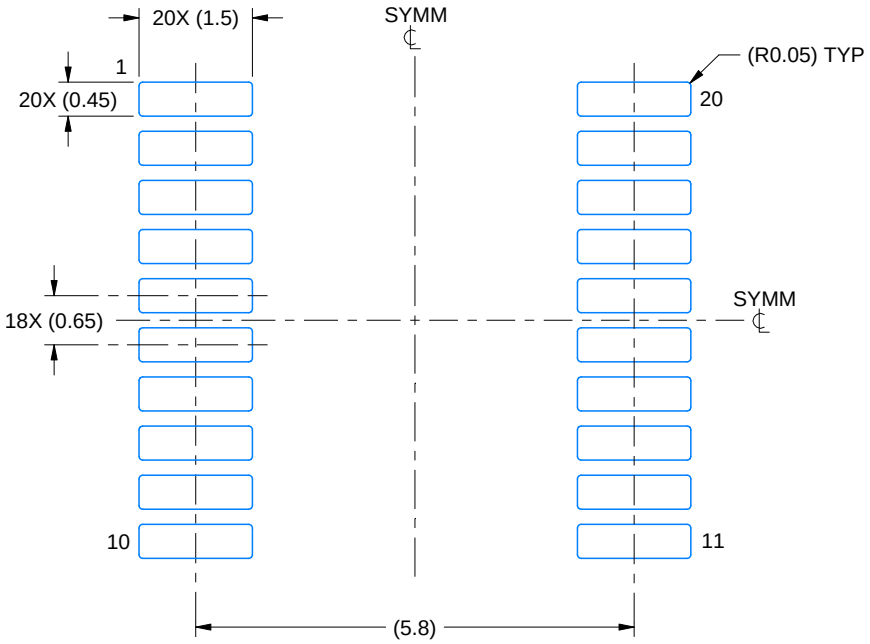

LAND PATTERN EXAMPLE
EXPOSED METAL SHOWN
SCALE: 10X



SOLDER MASK DETAILS

4220206/A 02/2017

NOTES: (continued)

6. Publication IPC-7351 may have alternate designs.
7. Solder mask tolerances between and around signal pads can vary based on board fabrication site.

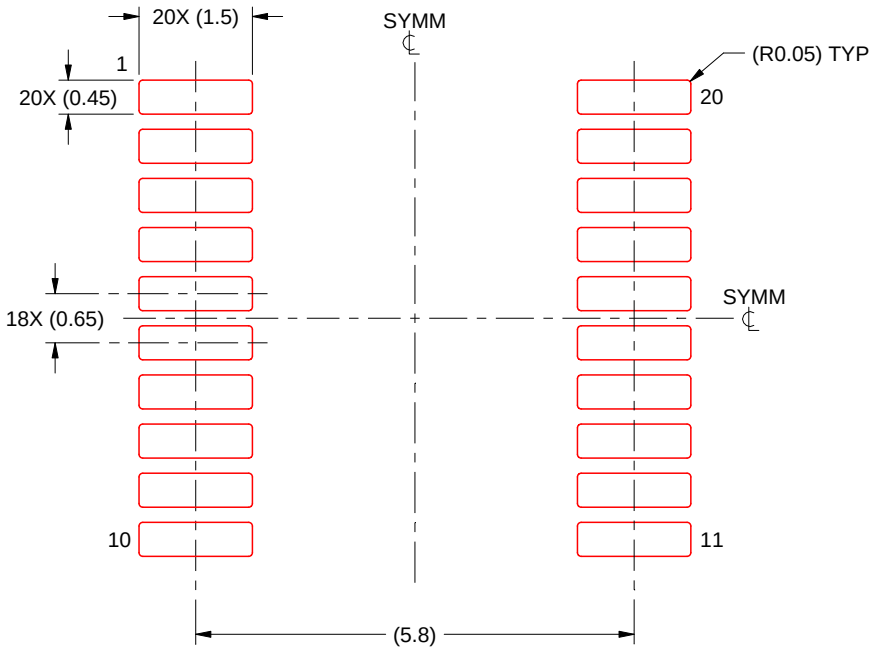

SOLDER PASTE EXAMPLE
BASED ON 0.125 mm THICK STENCIL
SCALE: 10X

4220206/A 02/2017

NOTES: (continued)

8. Laser cutting apertures with trapezoidal walls and rounded corners may offer better paste release. IPC-7525 may have alternate design recommendations.
9. Board assembly site may have different recommendations for stencil design.

PACKAGE OUTLINE

DGS0020A

VSSOP - 1.1 mm max height

SMALL OUTLINE PACKAGE

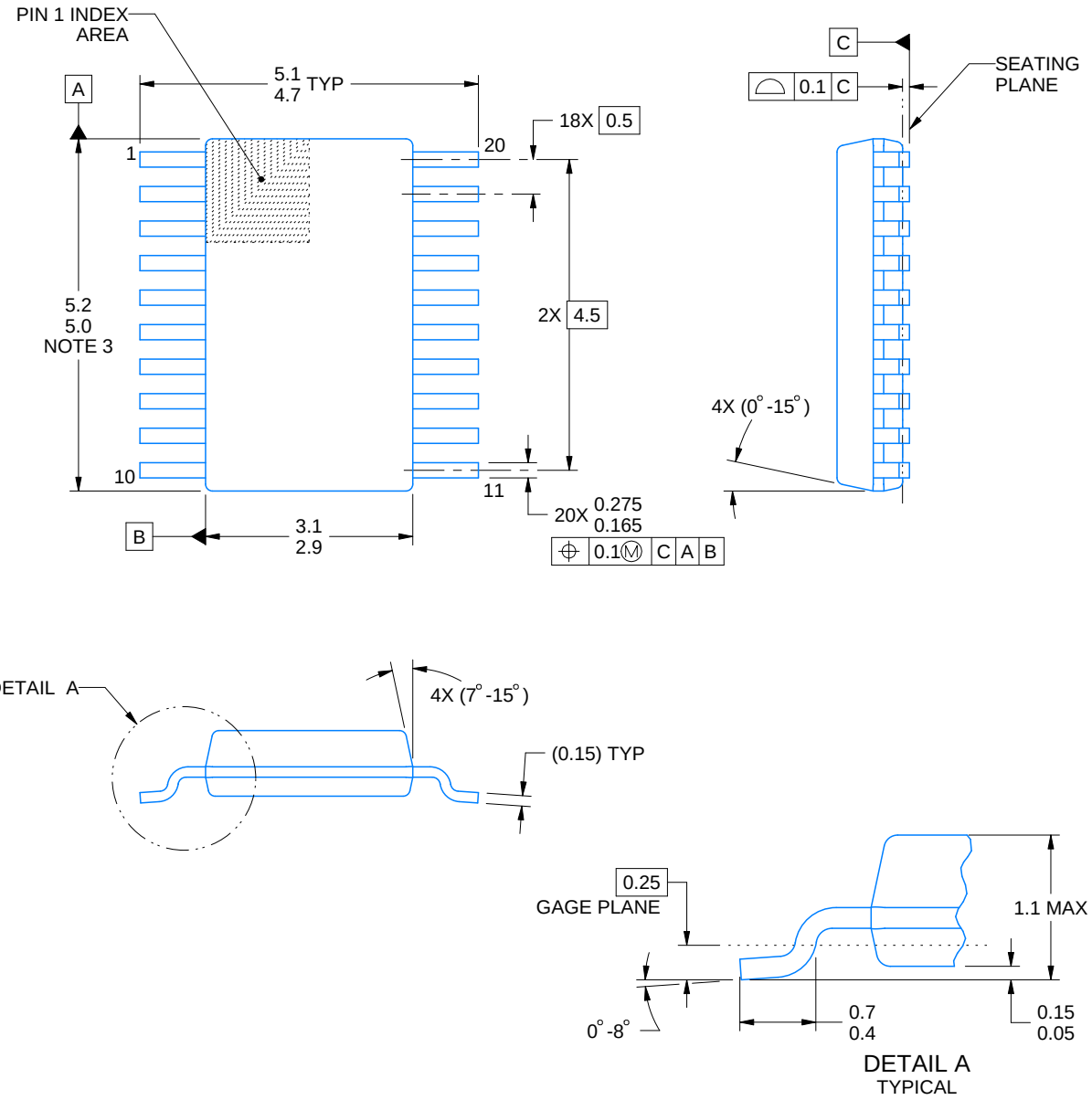

PowerPAD is a trademark of Texas Instruments.

NOTES:

1. All linear dimensions are in millimeters. Any dimensions in parenthesis are for reference only. Dimensioning and tolerancing per ASME Y14.5M.
2. This drawing is subject to change without notice.
3. This dimension does not include mold flash, protrusions, or gate burrs. Mold flash, protrusions, or gate burrs shall not exceed 0.15 mm per side.
4. No JEDEC registration as of September 2020.
5. Features may differ or may not be present.

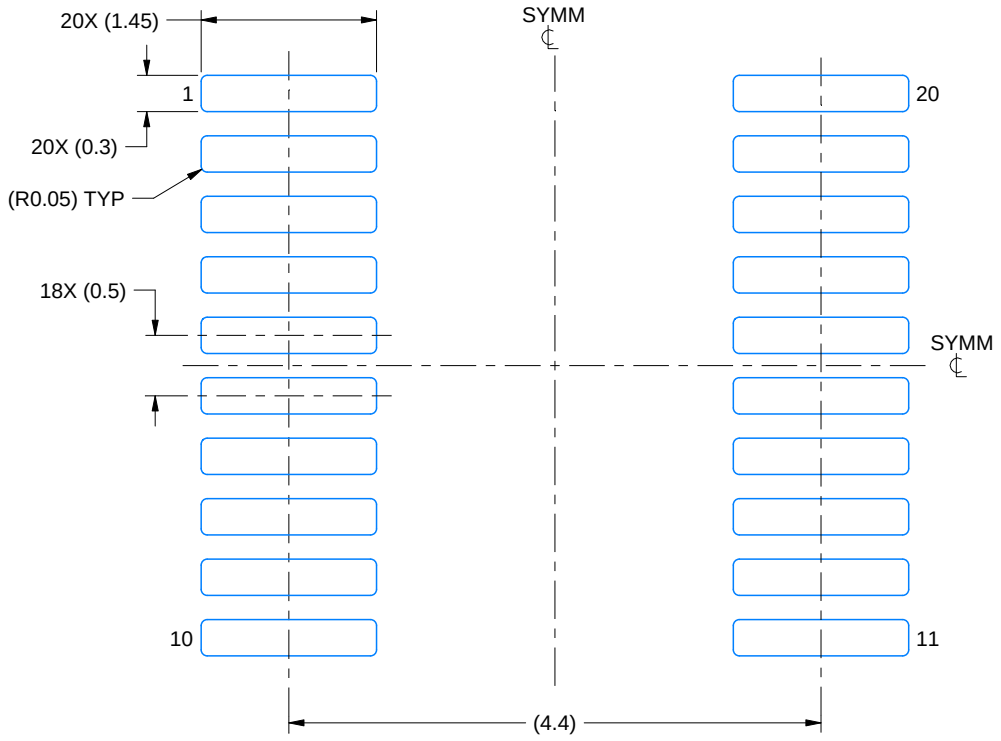

LAND PATTERN EXAMPLE
SCALE: 16X

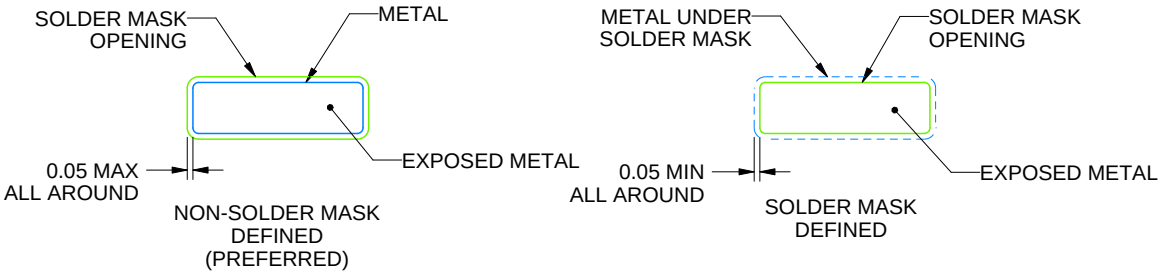

SOLDER MASK DETAILS

4226367/A 10/2020

NOTES: (continued)

6. Publication IPC-7351 may have alternate designs.
7. Solder mask tolerances between and around signal pads can vary based on board fabrication site.
8. This package is designed to be soldered to a thermal pad on the board. For more information, see Texas Instruments literature numbers SLMA002 (www.ti.com/lit/slma002) and SLMA004 (www.ti.com/lit/slma004).
9. Size of metal pad may vary due to creepage requirement.
10. Vias are optional depending on application, refer to device data sheet. It is recommended that vias under paste be filled, plugged or tented.

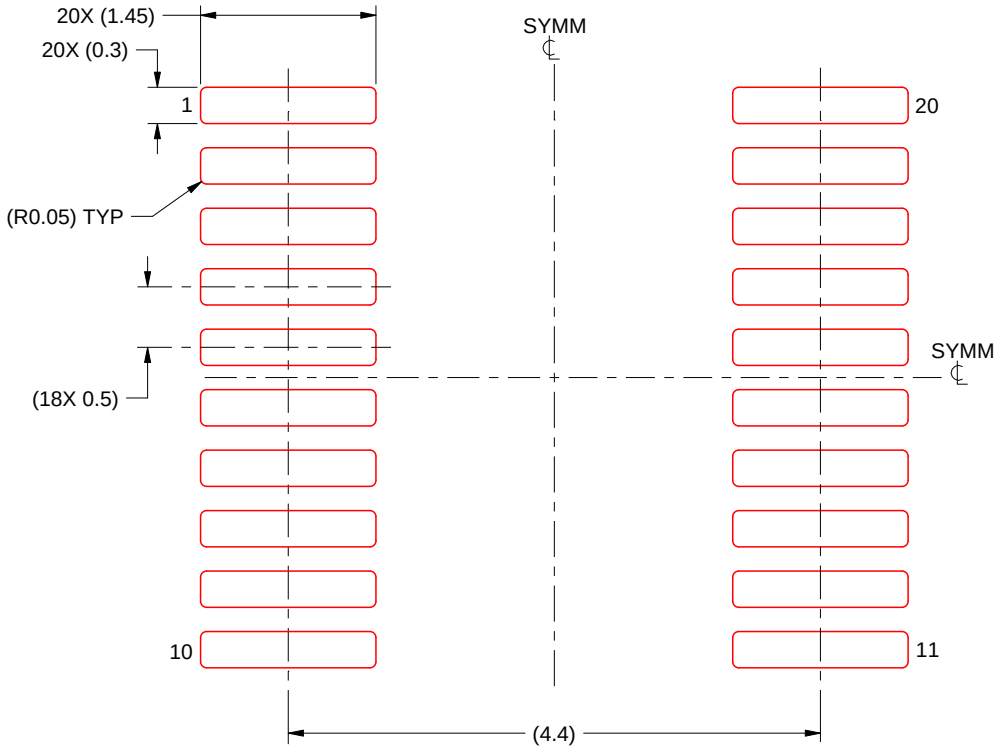

SOLDER PASTE EXAMPLE
BASED ON 0.125 mm THICK STENCIL
SCALE: 16X

4226367/A 10/2020

NOTES: (continued)

11. Laser cutting apertures with trapezoidal walls and rounded corners may offer better paste release. IPC-7525 may have alternate design recommendations.
12. Board assembly site may have different recommendations for stencil design.

PACKAGE OUTLINE

DB0020A

SSOP - 2 mm max height

SMALL OUTLINE PACKAGE

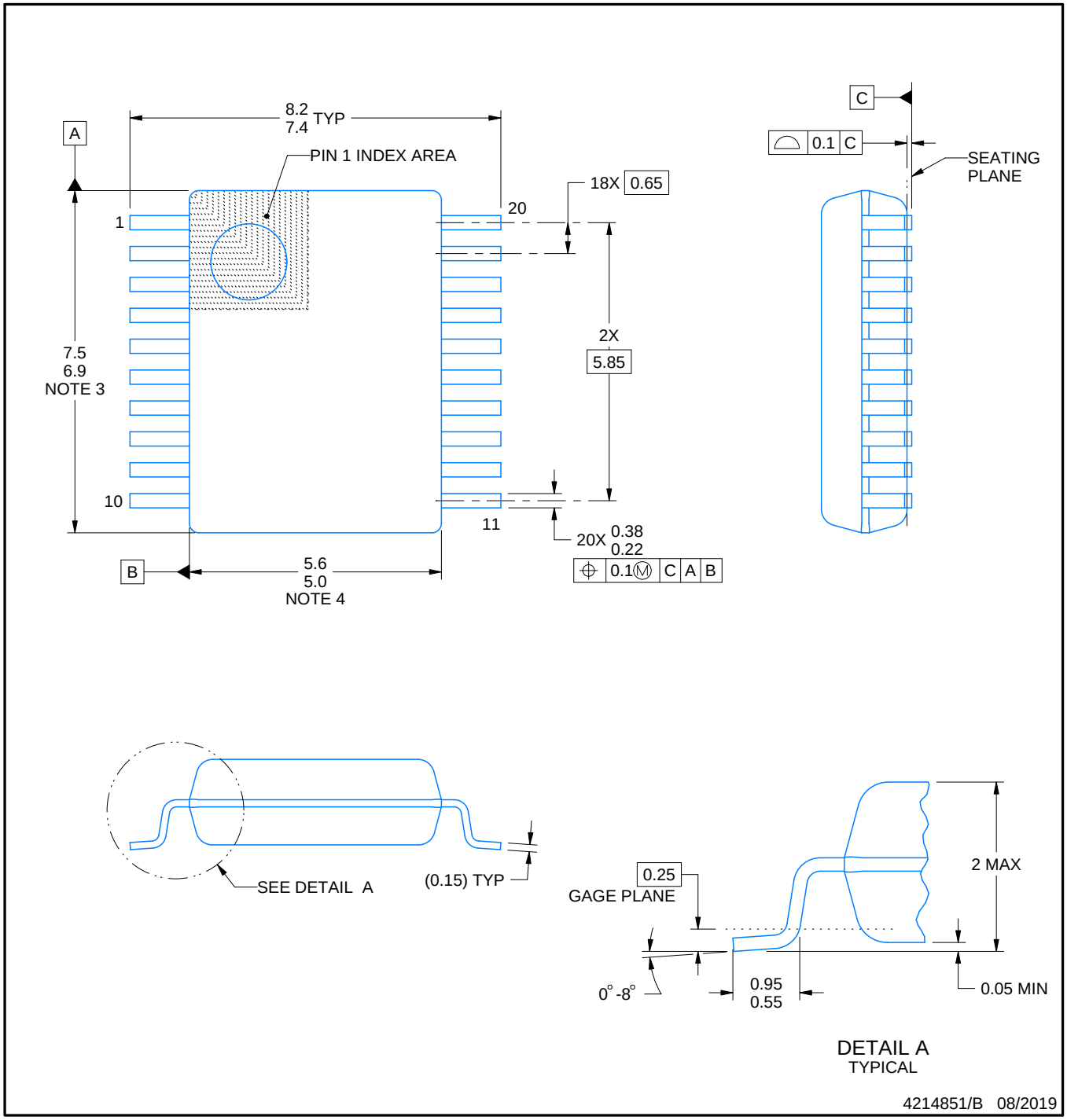

NOTES:

1. All linear dimensions are in millimeters. Any dimensions in parenthesis are for reference only. Dimensioning and tolerancing per ASME Y14.5M.
2. This drawing is subject to change without notice.
3. This dimension does not include mold flash, protrusions, or gate burrs. Mold flash, protrusions, or gate burrs shall not exceed 0.15 mm per side.
4. This dimension does not include interlead flash. Interlead flash shall not exceed 0.25 mm per side.
5. Reference JEDEC registration MO-150.

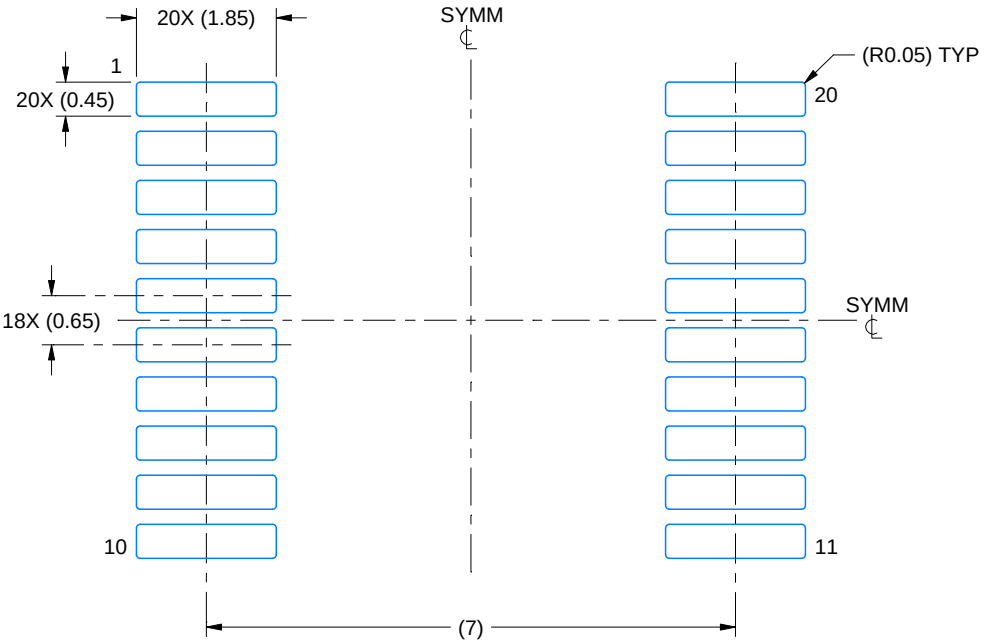

LAND PATTERN EXAMPLE
EXPOSED METAL SHOWN
SCALE: 10X

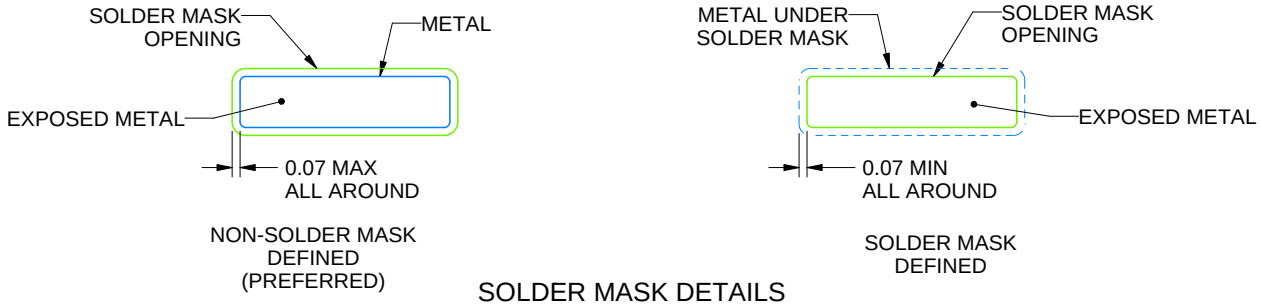

SOLDER MASK DETAILS

4214851/B 08/2019

NOTES: (continued)

6. Publication IPC-7351 may have alternate designs.
7. Solder mask tolerances between and around signal pads can vary based on board fabrication site.

EXAMPLE STENCIL DESIGN

DB0020A

SSOP - 2 mm max height

SMALL OUTLINE PACKAGE

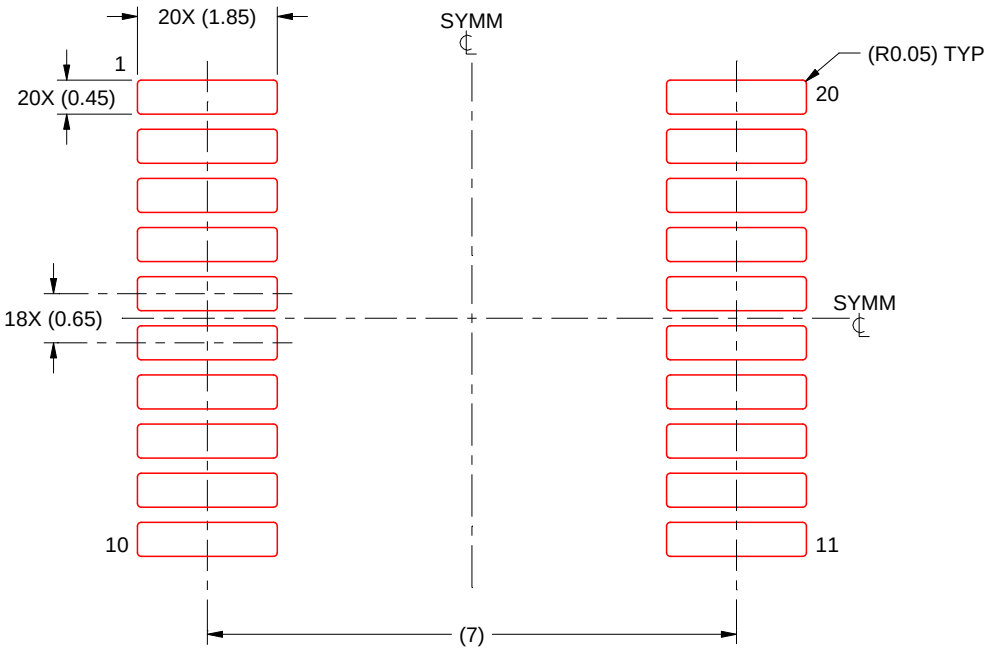

SOLDER PASTE EXAMPLE
BASED ON 0.125 mm THICK STENCIL
SCALE: 10X

4214851/B 08/2019

NOTES: (continued)

8. Laser cutting apertures with trapezoidal walls and rounded corners may offer better paste release. IPC-7525 may have alternate design recommendations.
9. Board assembly site may have different recommendations for stencil design.

GENERIC PACKAGE VIEW

RKS 20

VQFN - 1 mm max height

2.5 x 4.5, 0.5 mm pitch

PLASTIC QUAD FLATPACK - NO LEAD

This image is a representation of the package family, actual package may vary.
Refer to the product data sheet for package details.

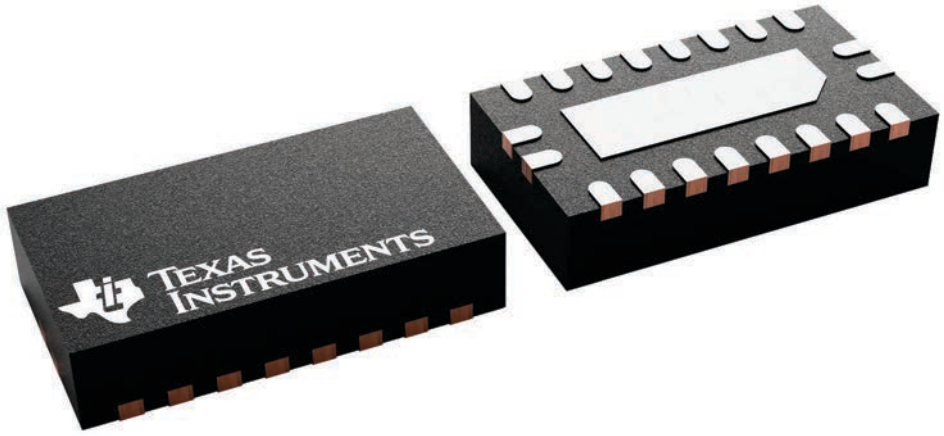

PACKAGE OUTLINE

RKS0020A

VQFN - 1 mm max height

PLASTIC QUAD FLATPACK - NO LEAD

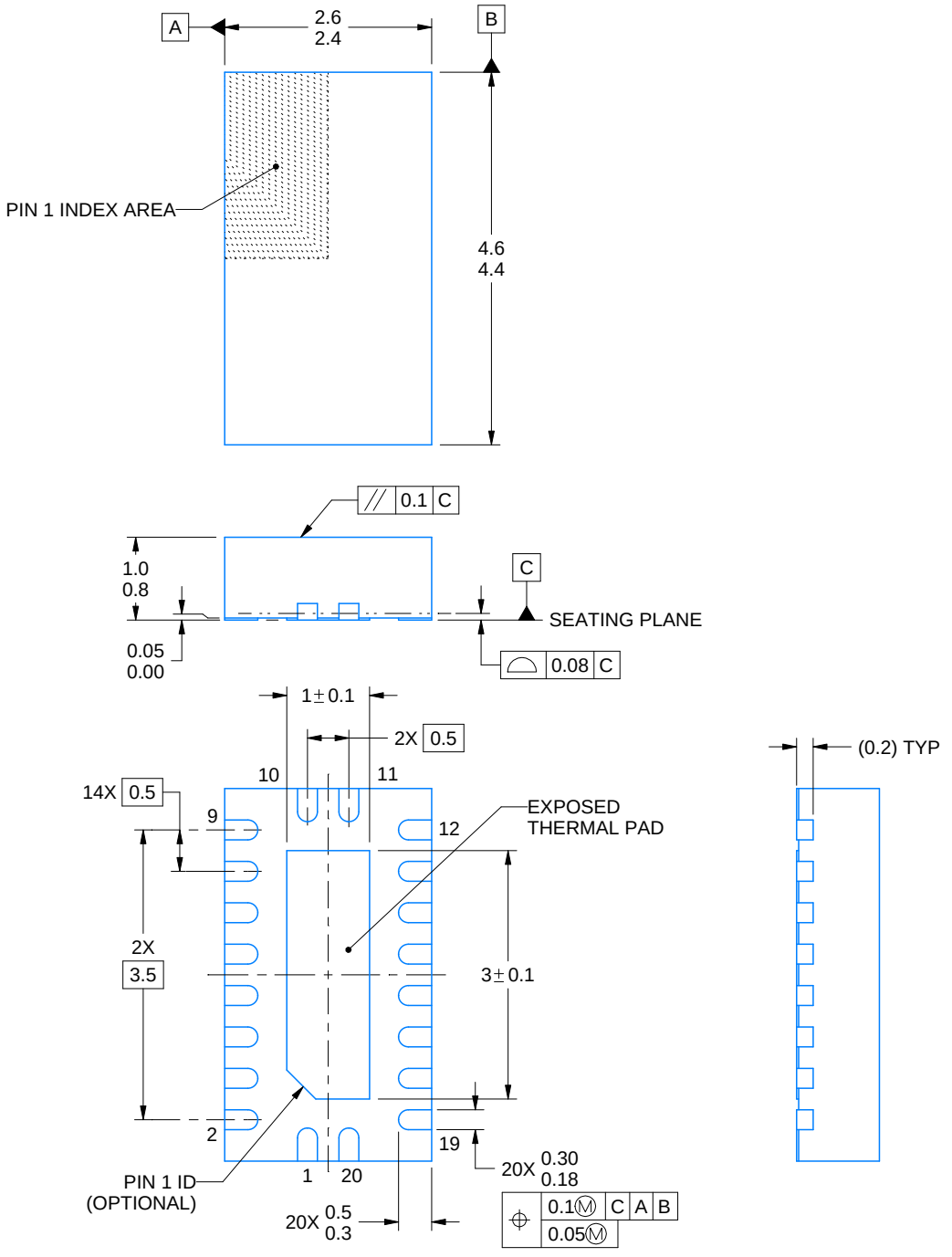

NOTES:

1. All linear dimensions are in millimeters. Any dimensions in parenthesis are for reference only. Dimensioning and tolerancing per ASME Y14.5M.
2. This drawing is subject to change without notice.
3. The package thermal pad must be soldered to the printed circuit board for thermal and mechanical performance.

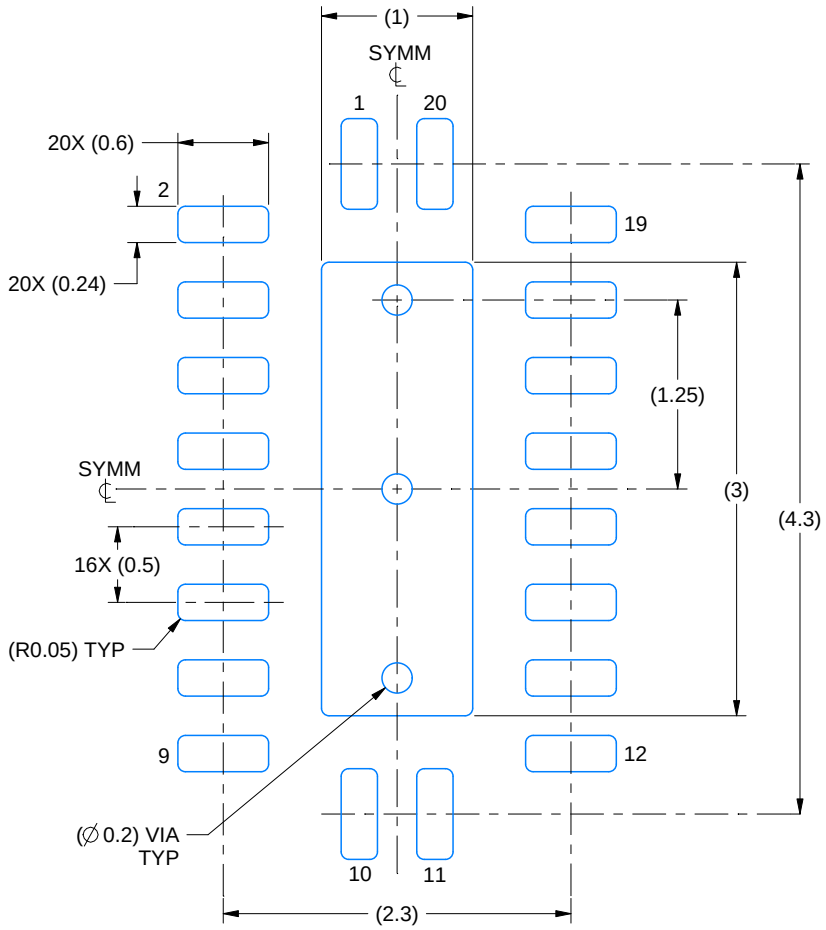

LAND PATTERN EXAMPLE
SCALE:20X

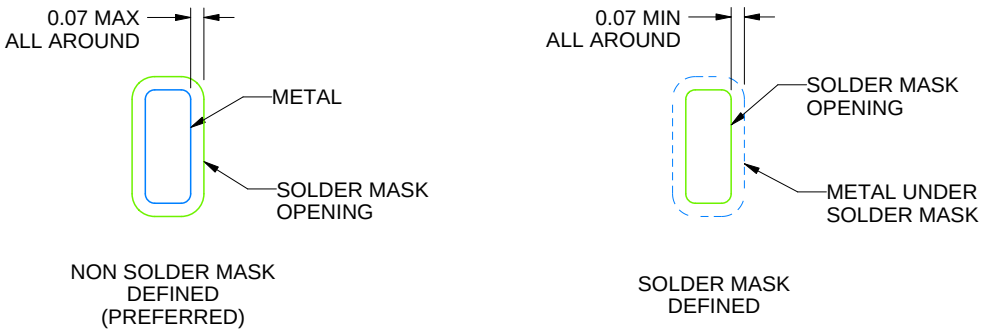

SOLDER MASK DETAILS

4222490/B 02/2021

NOTES: (continued)

4. This package is designed to be soldered to a thermal pad on the board. For more information, see Texas Instruments literature number SLUA271 (www.ti.com/lit/slua271).
5. Vias are optional depending on application, refer to device data sheet. If some or all are implemented, recommended via locations are shown.

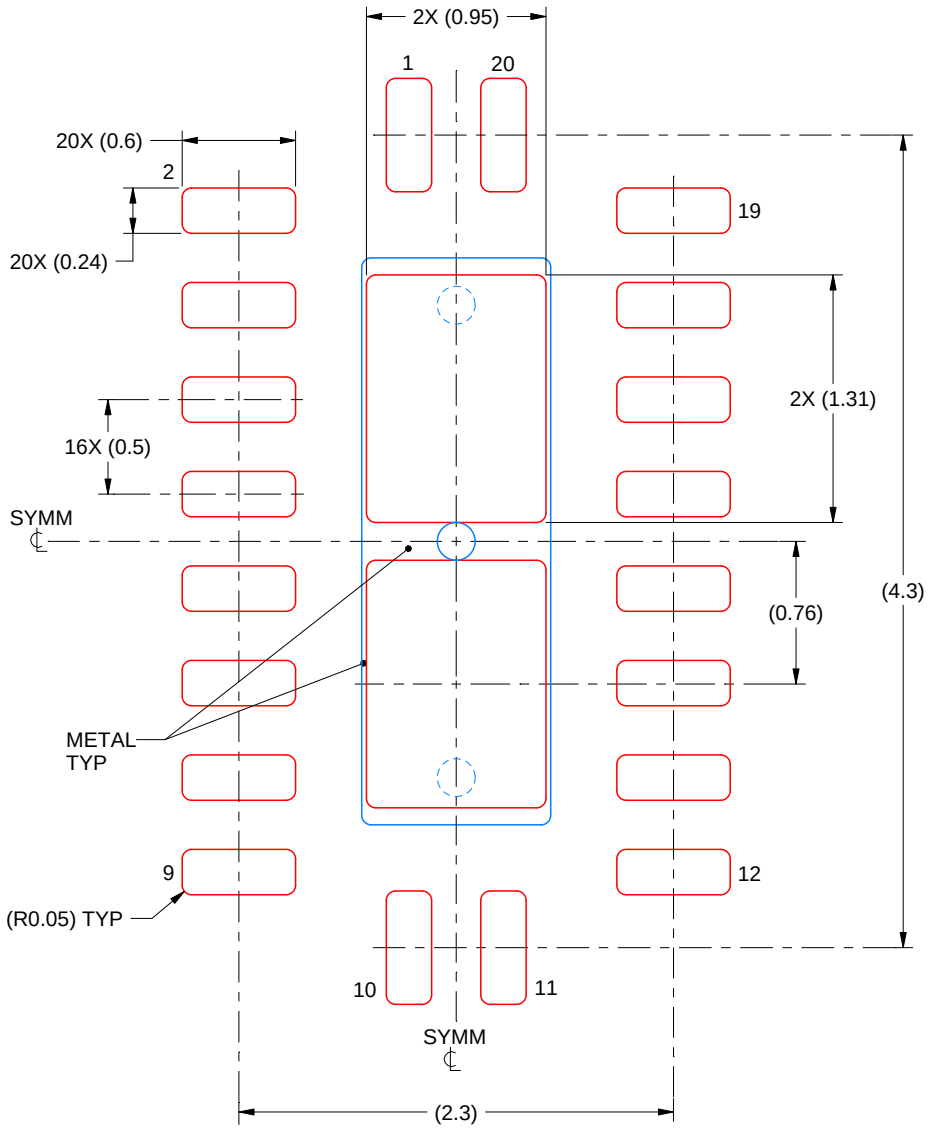

SOLDER PASTE EXAMPLE
BASED ON 0.125 mm THICK STENCIL

EXPOSED PAD
83% PRINTED SOLDER COVERAGE BY AREA
SCALE:25X

4222490/B 02/2021

NOTES: (continued)

6. Laser cutting apertures with trapezoidal walls and rounded corners may offer better paste release. IPC-7525 may have alternate design recommendations.

MECHANICAL DATA

NS (R-PDSO-G)** **PLASTIC SMALL-OUTLINE PACKAGE**

14-PINS SHOWN

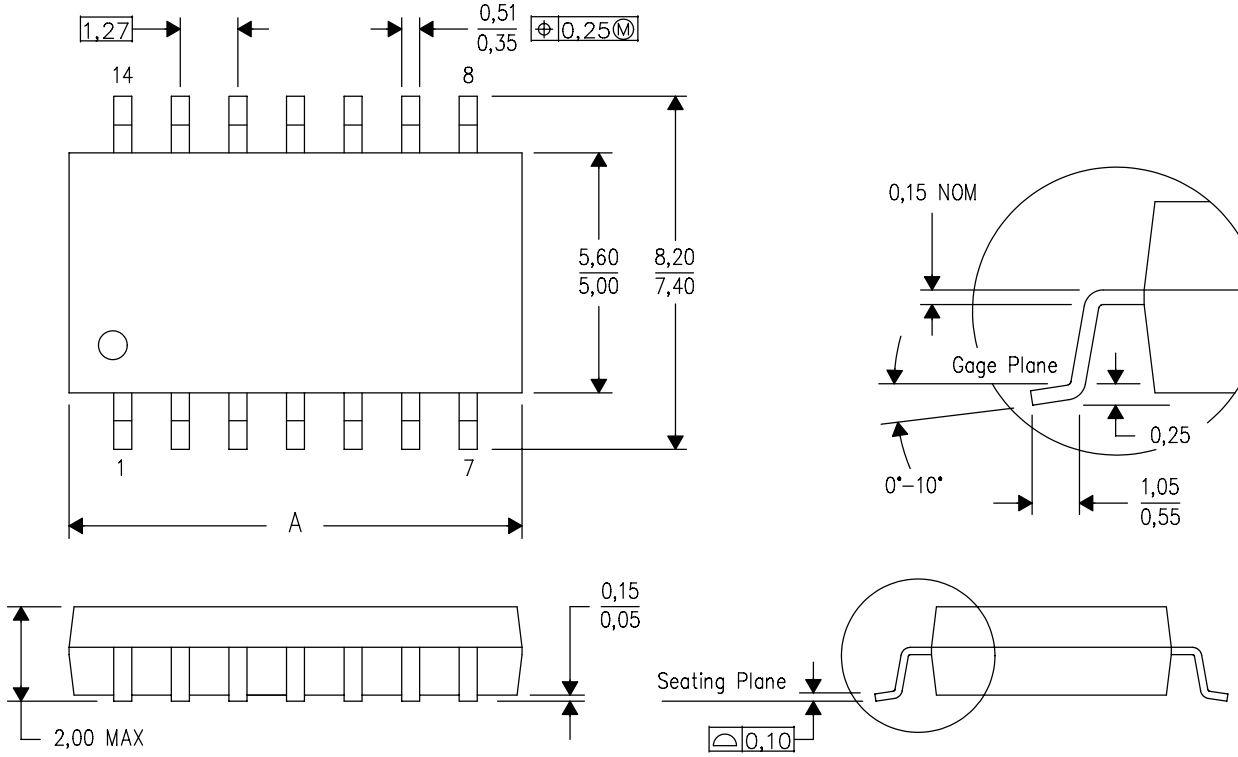

DIM \ PINS **	14	16	20	24
A MAX	10,50	10,50	12,90	15,30
A MIN	9,90	9,90	12,30	14,70

4040062/C 03/03

NOTES:
A. All linear dimensions are in millimeters.
B. This drawing is subject to change without notice.
C. Body dimensions do not include mold flash or protrusion, not to exceed 0,15.

J (R–GDIP–T**)

14 LEADS SHOWN

CERAMIC DUAL IN–LINE PACKAGE

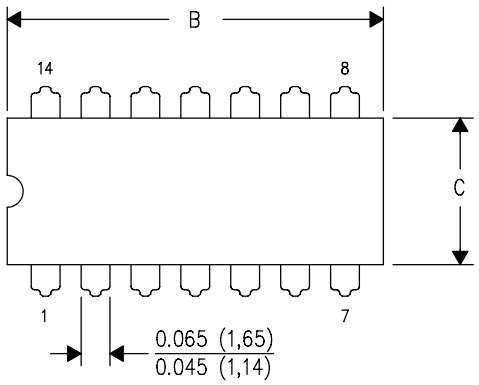

DIM \ PINS **	14	16	18	20
A	0.300 (7,62) BSC	0.300 (7,62) BSC	0.300 (7,62) BSC	0.300 (7,62) BSC
B MAX	0.785 (19,94)	.840 (21,34)	0.960 (24,38)	1.060 (26,92)
B MIN	—	—	—	—
C MAX	0.300 (7,62)	0.300 (7,62)	0.310 (7,87)	0.300 (7,62)
C MIN	0.245 (6,22)	0.245 (6,22)	0.220 (5,59)	0.245 (6,22)

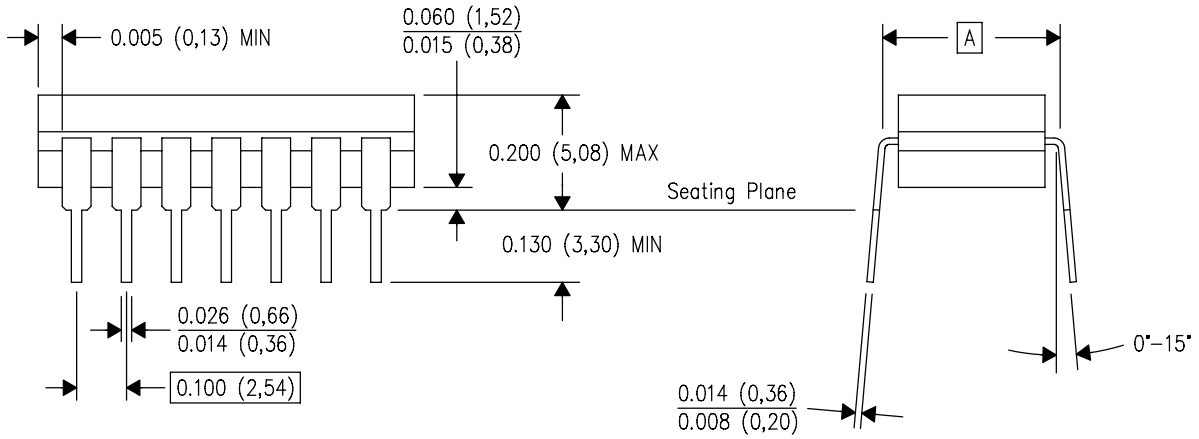

4040083/F 03/03

NOTES:
A. All linear dimensions are in inches (millimeters).
B. This drawing is subject to change without notice.
C. This package is hermetically sealed with a ceramic lid using glass frit.
D. Index point is provided on cap for terminal identification only on press ceramic glass frit seal only.
E. Falls within MIL STD 1835 GDIP1–T14, GDIP1–T16, GDIP1–T18 and GDIP1–T20.

GENERIC PACKAGE VIEW

FK 20

LCCC - 2.03 mm max height

8.89 x 8.89, 1.27 mm pitch

LEADLESS CERAMIC CHIP CARRIER

This image is a representation of the package family, actual package may vary.
Refer to the product data sheet for package details.

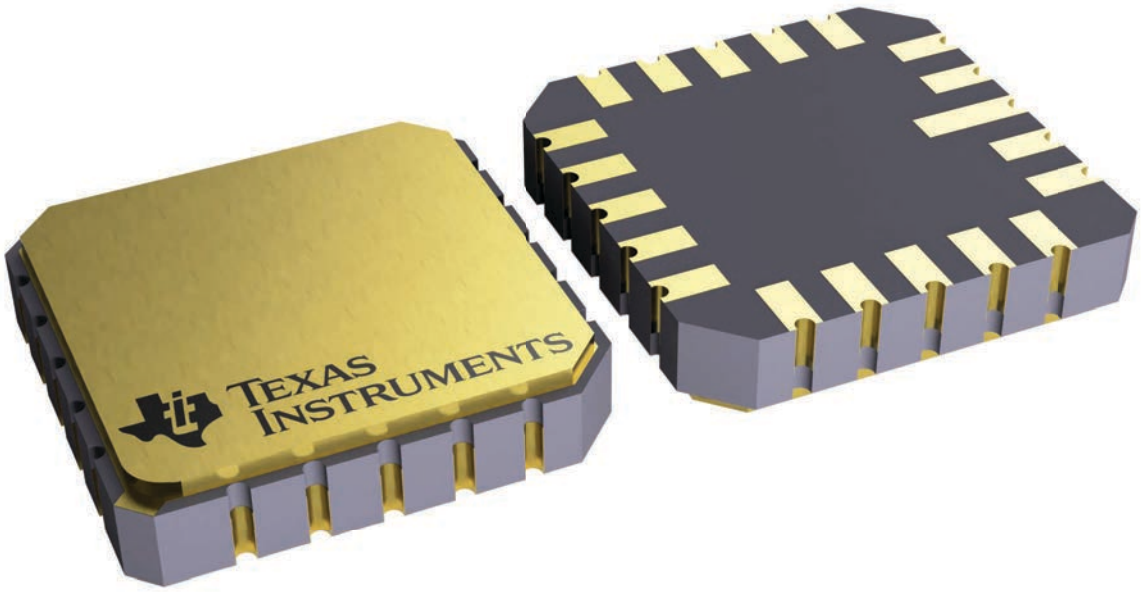

4229370VA\

N (R–PDIP–T**)

PLASTIC DUAL–IN–LINE PACKAGE

16 PINS SHOWN

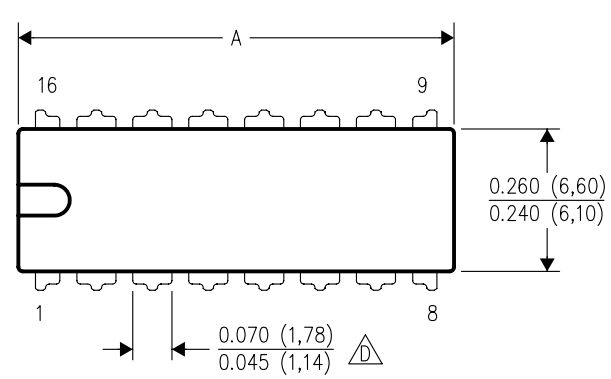

DIM \ PINS **	14	16	18	20
A MAX	0.775 (19,69)	0.775 (19,69)	0.920 (23,37)	1.060 (26,92)
A MIN	0.745 (18,92)	0.745 (18,92)	0.850 (21,59)	0.940 (23,88)
MS–001 VARIATION (C)	AA	BB	AC	AD

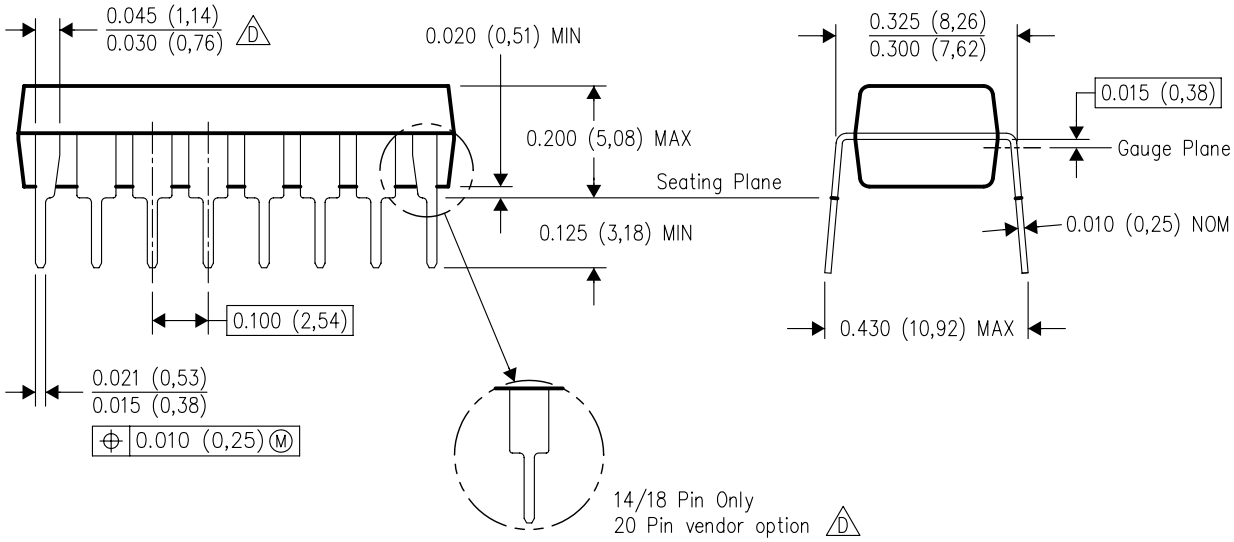

4040049/E 12/2002

NOTES:
A. All linear dimensions are in inches (millimeters).
B. This drawing is subject to change without notice.
C. Falls within JEDEC MS–001, except 18 and 20 pin minimum body length (Dim A).
D. The 20 pin end lead shoulder width is a vendor option, either half or full width.

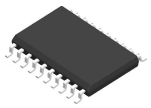

PACKAGE OUTLINE

DW0020A

SOIC - 2.65 mm max height

SOIC

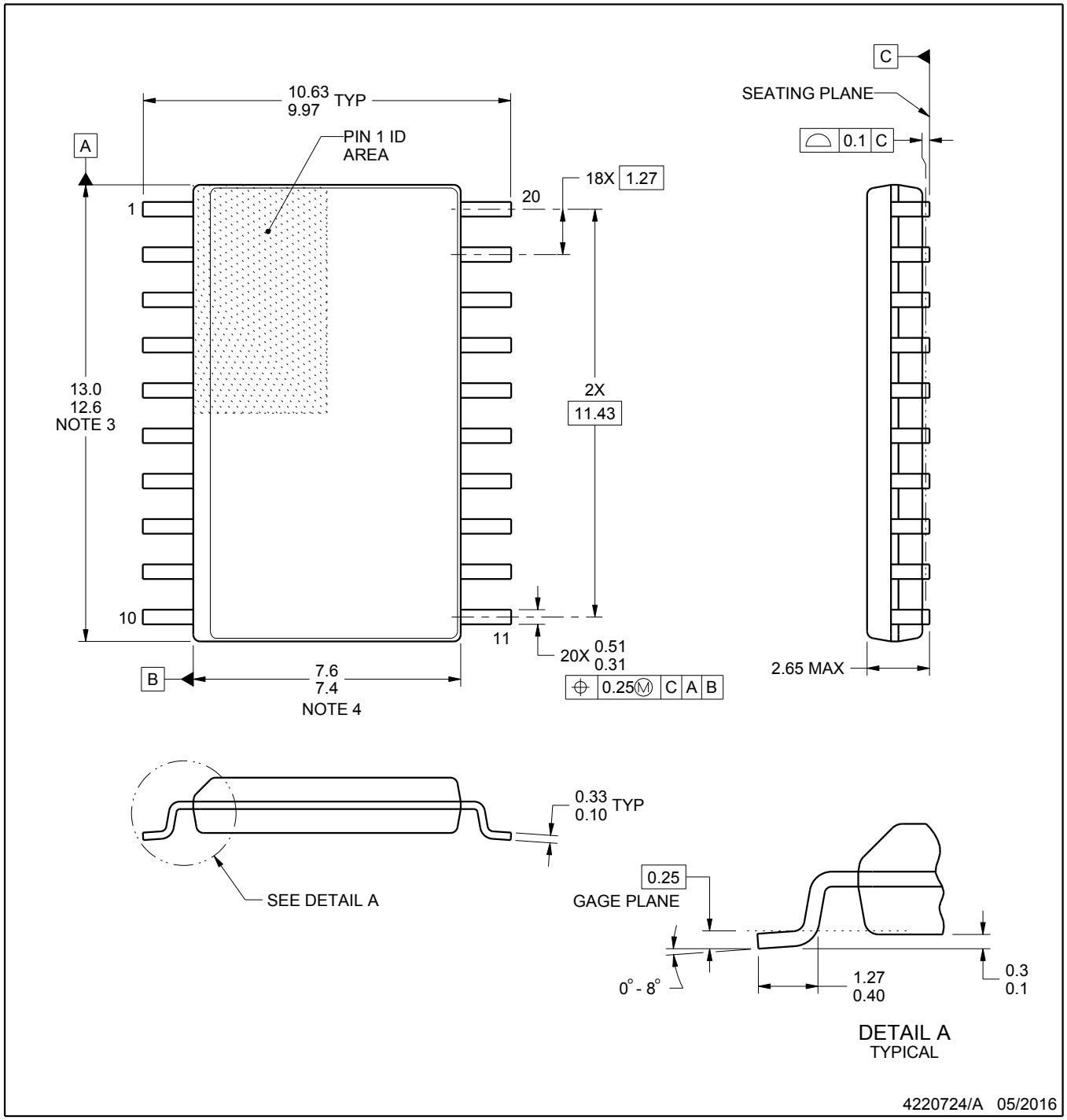

NOTES:

1. All linear dimensions are in millimeters. Dimensions in parenthesis are for reference only. Dimensioning and tolerancing per ASME Y14.5M.
2. This drawing is subject to change without notice.
3. This dimension does not include mold flash, protrusions, or gate burrs. Mold flash, protrusions, or gate burrs shall not exceed 0.15 mm per side.
4. This dimension does not include interlead flash. Interlead flash shall not exceed 0.43 mm per side.
5. Reference JEDEC registration MS-013.

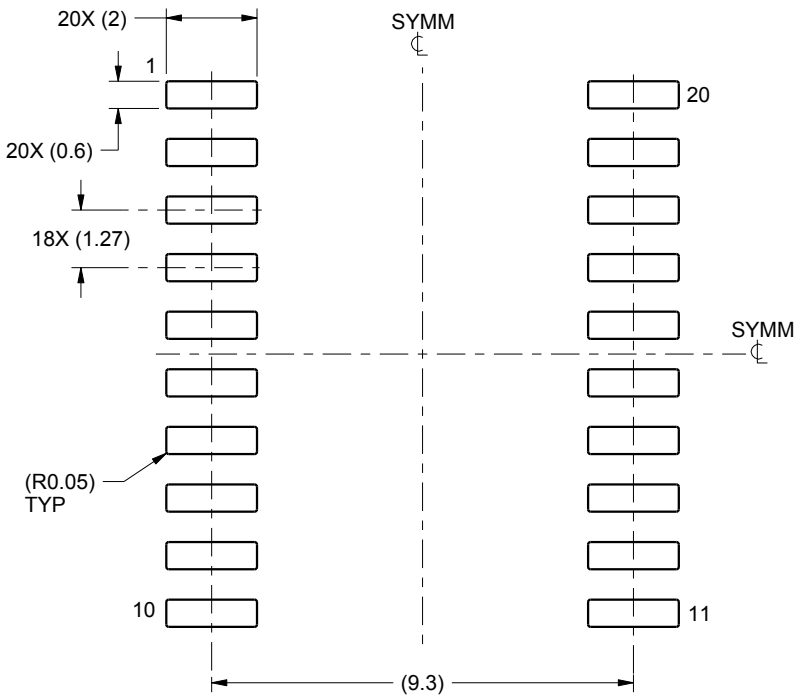

LAND PATTERN EXAMPLE
SCALE:6X

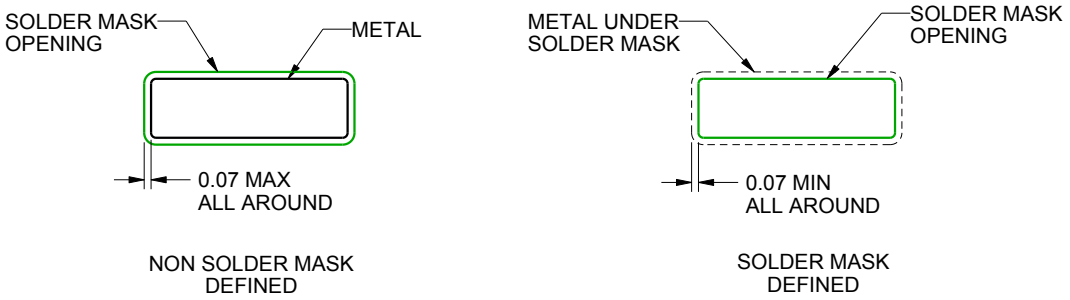

SOLDER MASK DETAILS

4220724/A 05/2016

NOTES: (continued)

6. Publication IPC-7351 may have alternate designs.
7. Solder mask tolerances between and around signal pads can vary based on board fabrication site.

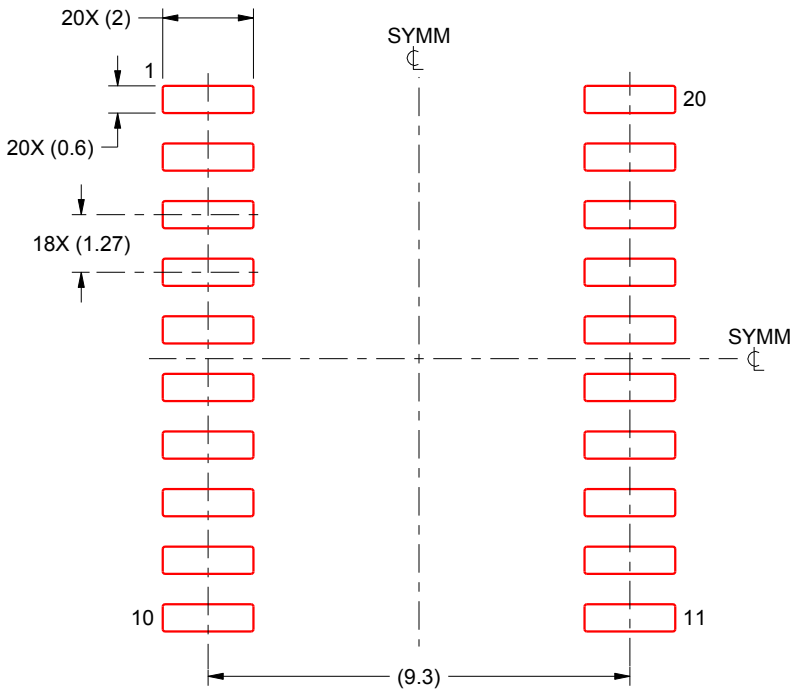

SOLDER PASTE EXAMPLE
BASED ON 0.125 mm THICK STENCIL
SCALE:6X

4220724/A 05/2016

NOTES: (continued)

8. Laser cutting apertures with trapezoidal walls and rounded corners may offer better paste release. IPC-7525 may have alternate design recommendations.
9. Board assembly site may have different recommendations for stencil design.

重要通知和免责声明

TI“按原样”提供技术和可靠性数据（包括数据表）、设计资源（包括参考设计）、应用或其他设计建议、网络工具、安全信息和其他资源，不保证没有瑕疵且不做出任何明示或暗示的担保，包括但不限于对适销性、与某特定用途的适用性或不侵犯任何第三方知识产权的暗示担保。

这些资源可供使用 TI 产品进行设计的熟练开发人员使用。您将自行承担以下全部责任：(1) 针对您的应用选择合适的 TI 产品，(2) 设计、验证并测试您的应用，(3) 确保您的应用满足相应标准以及任何其他安全、安保法规或其他要求。

这些资源如有变更，恕不另行通知。TI 授权您仅可将这些资源用于研发本资源所述的 TI 产品的相关应用。严禁以其他方式对这些资源进行复制或展示。您无权使用任何其他 TI 知识产权或任何第三方知识产权。对于因您对这些资源的使用而对 TI 及其代表造成的任何索赔、损害、成本、损失和债务，您将全额赔偿，TI 对此概不负责。

TI 提供的产品受 TI 销售条款)、TI 通用质量指南 或 ti.com 上其他适用条款或 TI 产品随附的其他适用条款的约束。TI 提供这些资源并不会扩展或以其他方式更改 TI 针对 TI 产品发布的适用的担保或担保免责声明。 除非德州仪器 (TI) 明确将某产品指定为定制产品或客户特定产品，否则其产品均为按确定价格收入目录的标准通用器件。

TI 反对并拒绝您可能提出的任何其他或不同的条款。

版权所有 © 2026，德州仪器 (TI) 公司

最后更新日期：2025 年 10 月