DATASHEET

LAMP
333-2UYD/S530-A3

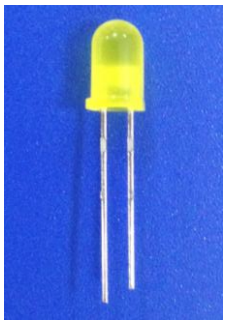

Features

- Choice of various viewing angles
- Available on tape and reel.
- Reliable and robust
- The product itself will remain within RoHS compliant version.
- Compliance with EU REACH
- Compliance Halogen Free .(Br <900 ppm ,Cl <900 ppm , Br+Cl < 1500 ppm)

Description

•The series is specially designed for applications requiring higher brightness
•The led lamps are available with different colors, intensities..

Applications

- TV set
- Monitor
- Telephone
- Computer

Copyright © 2010, Everlight All Rights Reserved. Release Date : Dece.23 . 2016. Issue No: DAE-0000704 Rev.4

Ver.:4 Release Date:11/27/2016 狀態:Approved(正式發行)

Device Selection Guide

Chip Materials	Emitted Color	Resin Color
AlGaInP	Brilliant Yellow	Yellow Diffused

Absolute Maximum Ratings (Ta=25℃)

Parameter	Symbol	Rating	Unit
Continuous Forward Current	I_F	25	mA
Peak Forward Current (Duty 1/10 @ 1KHZ)	I_{FP}	60	mA
Reverse Voltage	V_R	5	V
Power Dissipation	P_d	60	mW
Operating Temperature	T_{opr}	-40 ~ +85	℃
Storage Temperature	Tstg	-40 ~ +100	℃
Soldering Temperature	T_{sol}	260 ℃ for 5 sec.	

Electro-Optical Characteristics (Ta=25℃)

Parameter	Symbol	Min.	Typ.	Max.	Unit	Condition
Luminous Intensity	Iv	100	320	-----	mcd	I_F=20mA
Viewing Angle	$2\theta_{1/2}$	-----	30	-----	deg	I_F=20mA
Peak Wavelength	λ_p	-----	591	-----	nm	I_F=20mA
Dominant Wavelength	λ_d	-----	589	-----	nm	I_F=20mA
Spectrum Radiation Bandwidth	$\Delta\lambda$	-----	15	-----	nm	I_F=20mA
Forward Voltage	V_F	1.7	2.0	2.4	V	I_F=20mA
Reverse Current	I_R	-----	-----	10	μA	V_R=5V

Note:
*Measurement Uncertainty of Forward Voltage: ±0.1V
*Measurement Uncertainty of Luminous Intensity: ±10%
*Measurement Uncertainty of Dominant Wavelength ±1.0nm

Copyright © 2010, Everlight All Rights Reserved. Release Date : Dece.23. 2016. Issue No: DAE-0000704 Rev.4
Ver.:4 Release Date:11/27/2018 承認:Approved(正式發行)

Typical Electro-Optical Characteristics Curves

Relative Intensity vs. Wavelength (Ta=25℃)

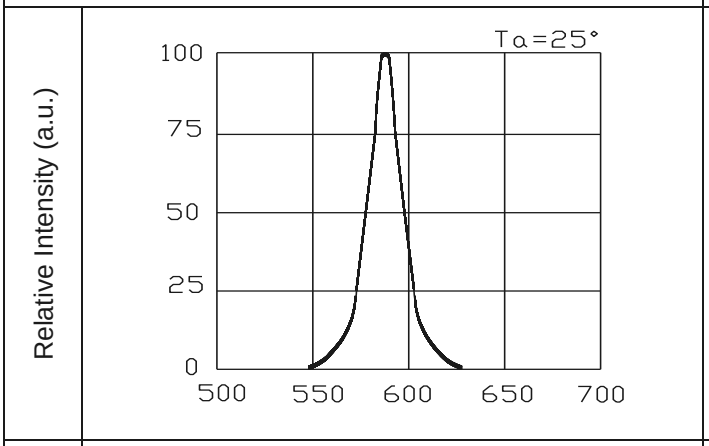

Directivity (Ta=25℃)

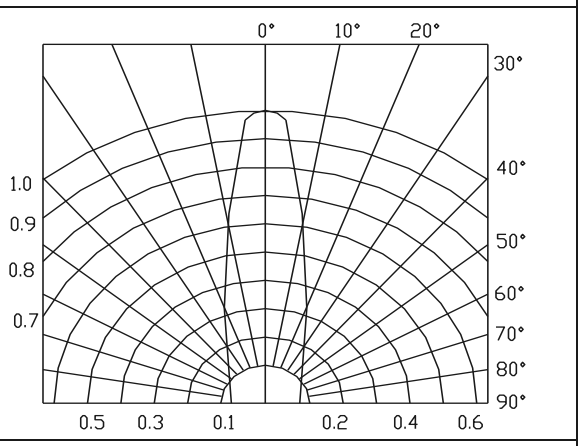

Forward Current vs. Forward Voltage (Ta=25℃)

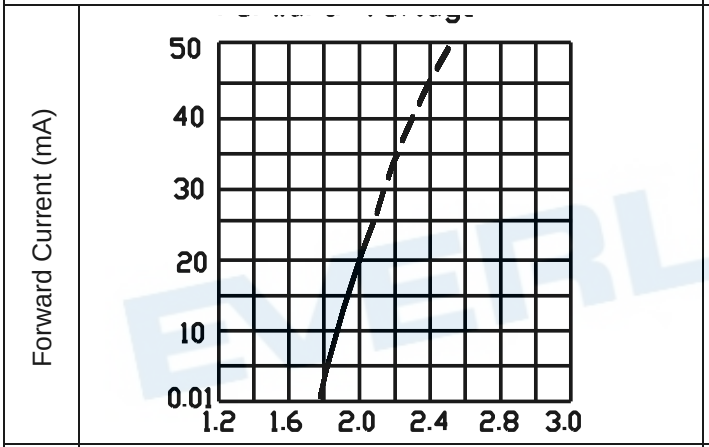

Relative Intensity vs. Forward Current (Ta=25℃)

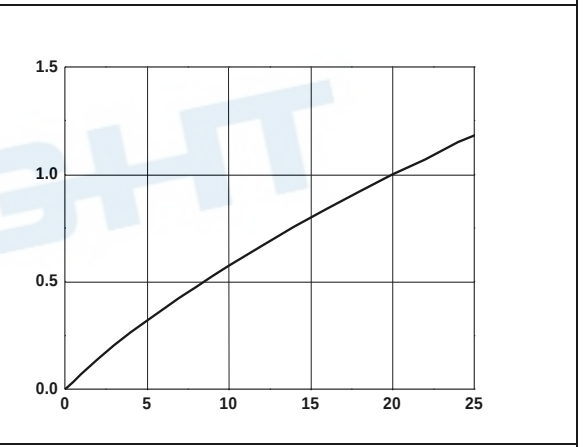

Relative Intensity vs. Ambient Temp.

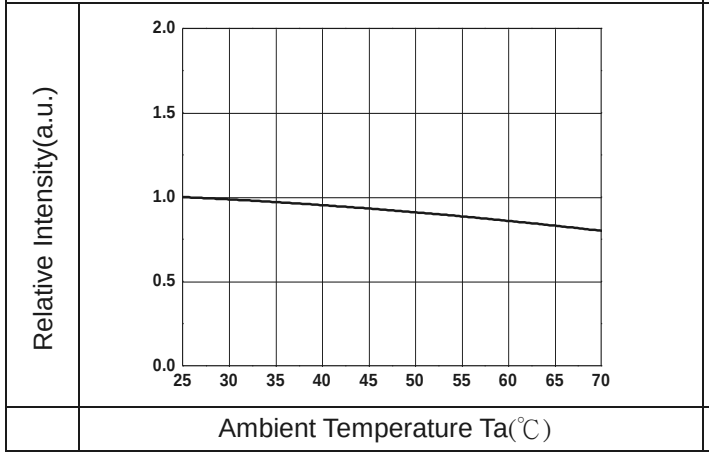

Forward Current vs. Ambient Temp.

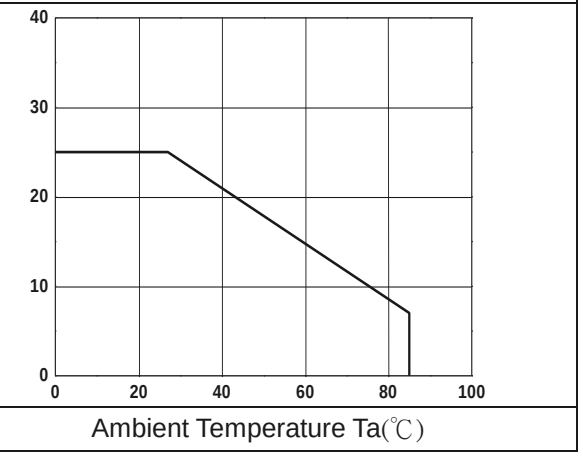

Copyright © 2010, Everlight All Rights Reserved. Release Date : Dece.23. 2016. Issue No: DAE-0000704. Rev.4
Ver.:4 Release Date:11/27/2018 承認:Approved(王小姐修訂)

Package Dimension

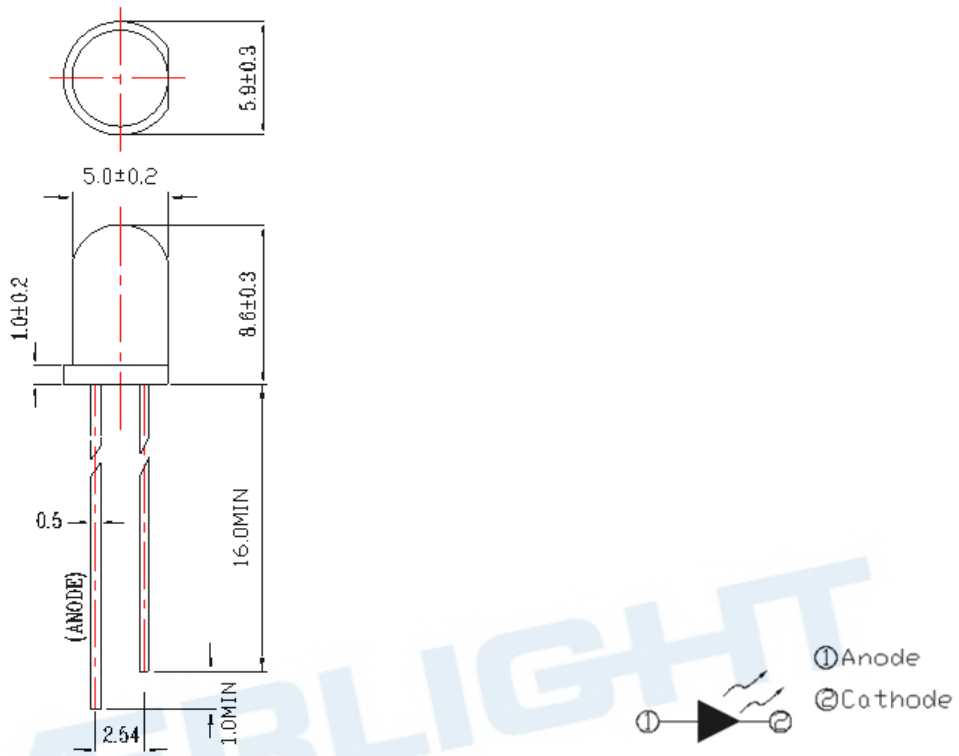

Note: Note:
1. All dimensions are in millimeters
2. The height of flange must be less than 1.5mm(0.059").
3. Without special declared, the tolerance is ±0.25mm

Copyright © 2010, Everlight All Rights Reserved. Release Date : Dece.23. 2016. Issue No: DAE-0000704. Rev.4
Ver.:4 Release Date:11/27/2018 承認:Approved(正式發行)

Moisture Resistant Packing Materials

Label Explanation

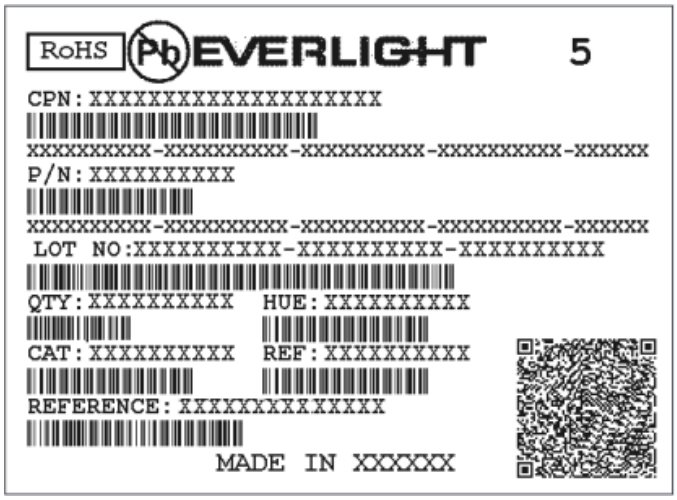

CPN: Customer's Production Number

P/N : Production Number

QTY: Packing Quantity

CAT: Ranks of Luminous Intensity

HUE: Ranks of Dominant Wavelength

REF: Ranks of Forward Voltage

LOT No: Lot Number

Packing Specification

■ Anti-electrostatic bag

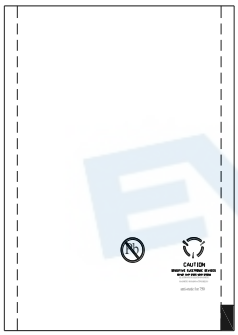

■ Inner Carton

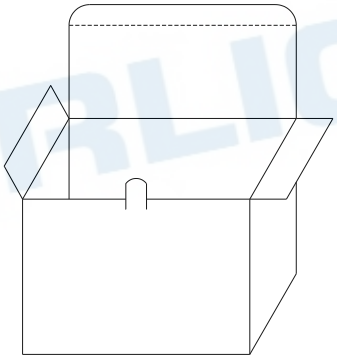

■ Outside Carton

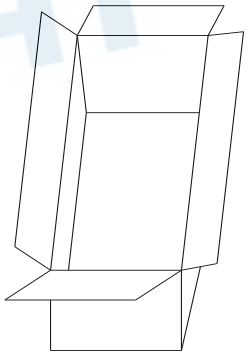

■ Packing Quantity

1. Min 200 To 500 PCS/1 Bag, 5 Bags/1 Inner Carton
2. 10 Inner Cartons/1 Outside Carton

Copyright © 2010, Everlight All Rights Reserved. Release Date : Dece.23. 2016. Issue No: DAE-0000704 Rev.4

Ver.:4 Release Date:11/27/2018 承認:Approved(正式發行)

Notes

1. Lead Forming
   - During lead formation, the leads should be bent at a point at least 3mm from the base of the epoxy bulb.
   - Lead forming should be done before soldering.
   - Avoid stressing the LED package during leads forming. The stress to the base may damage the LED's characteristics or it may break the LEDs.
   - Cut the LED lead frames at room temperature. Cutting the lead frames at high temperatures may cause failure of the LEDs.
   - When mounting the LEDs onto a PCB, the PCB holes must be aligned exactly with the lead position of the LED. If the LEDs are mounted with stress at the leads, it causes deterioration of the epoxy resin and this will degrade the LEDs.

2. Storage
   - The LEDs should be stored at 30°C or less and 70%RH or less after being shipped from Everlight and the storage life limits are 3 months. If the LEDs are stored for 3 months or more, they can be stored for a year in a sealed container with a nitrogen atmosphere and moisture absorbent material.
   - Please avoid rapid transitions in ambient temperature, especially, in high humidity environments where condensation can occur.

3. Soldering
   - Careful attention should be paid during soldering. When soldering, leave more then 3mm from solder joint to epoxy bulb, and soldering beyond the base of the tie bar is recommended.
   - Recommended soldering conditions:

Hand Soldering		DIP Soldering	
Temp. at tip of iron	300℃ Max. (30W Max.)	Preheat temp.	100℃ Max. (60 sec Max.)
Soldering time	3 sec Max.	Bath temp. & time	260 Max., 5 sec Max
Distance	3mm Min.(From solder joint to epoxy bulb)	Distance	3mm Min. (From solder joint to epoxy bulb)

   - Recommended soldering profile

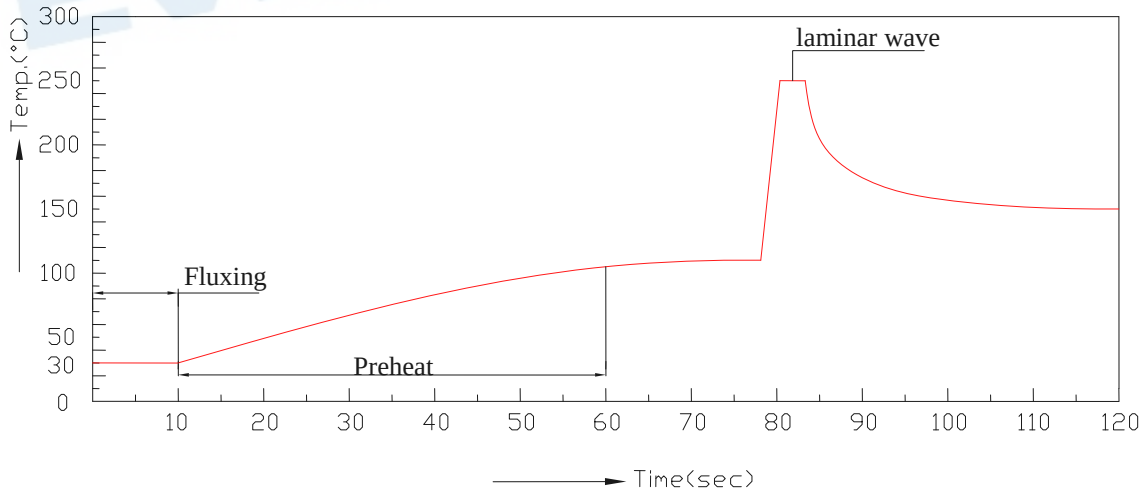

   - Avoiding applying any stress to the lead frame while the LEDs are at high temperature particularly when soldering.
   - Dip and hand soldering should not be done more than one time
   - After soldering the LEDs, the epoxy bulb should be protected from mechanical shock or vibration until the LEDs return to room temperature.
   - A rapid-rate process is not recommended for cooling the LEDs down from the peak temperature.

Copyright © 2010, Everlight All Rights Reserved. Release Date : Dece.23. 2016. Issue No: DAE-0000704. Rev.4

Ver.:4 Release Date:11/27/2018 承認:Approved(正式發行)

- Although the recommended soldering conditions are specified in the above table, dip or hand soldering at the lowest possible temperature is desirable for the LEDs.

- Wave soldering parameter must be set and maintain according to recommended temperature and dwell time in the solder wave.

4. Cleaning
   - When necessary, cleaning should occur only with isopropyl alcohol at room temperature for a duration of no more than one minute. Dry at room temperature before use.
   - Do not clean the LEDs by the ultrasonic. When it is absolutely necessary, the influence of ultrasonic cleaning on the LEDs depends on factors such as ultrasonic power and the assembled condition. Ultrasonic cleaning shall be pre-qualified to ensure this will not cause damage to the LED

5. Heat Management
   - Heat management of LEDs must be taken into consideration during the design stage of LED application. The current should be de-rated appropriately by referring to the de-rating curve found in each product specification.
   - The temperature surrounding the LED in the application should be controlled. Please refer to the data sheet de-rating curve.

6. ESD (Electrostatic Discharge)
   - The products are sensitive to static electricity or surge voltage. ESD can damage a die and its reliability.
     When handling the products, the following measures against electrostatic discharge are strongly recommended:
     Eliminating the charge
     Grounded wrist strap, ESD footwear, clothes, and floors
     Grounded workstation equipment and tools
     ESD table/shelf mat made of conductive materials
   - Proper grounding is required for all devices, equipment, and machinery used in product assembly.
     Surge protection should be considered when designing of commercial products.
   - If tools or equipment contain insulating materials such as glass or plastic,
     the following measures against electrostatic discharge are strongly recommended:
     Dissipating static charge with conductive materials
     Preventing charge generation with moisture
     Neutralizing the charge with ionizers

7. Directions for use
   - The LEDs should be operated with forward bias. The driving circuit must be designed so that the LEDs are not subjected to forward or reverse voltage while it is off. If reverse voltage is continuously applied to the LEDs, it may cause migration resulting in LED damage.

8. Other
   - Above specification may be changed without notice. EVERLIGHT will reserve authority on material change for above specification.
   - When using this product, please observe the absolute maximum ratings and the instructions for using outlined in these specification sheets. EVERLIGHT assumes no responsibility for any damage resulting from use of the product which does not comply
     with the absolute maximum ratings and the instructions included in these specification sheets.
   - These specification sheets include materials protected under copyright of EVERLIGHT corporation. Please don't

Copyright © 2010, Everlight All Rights Reserved. Release Date : Dece.23. 2016. Issue No: DAE-0000704 Rev.4
Ver.:4 Release Date:11/27/2018 承認:Approved(正式發行)

reproduce or cause anyone to reproduce them without EVERLIGHT's consent.

DISCLAIMER

1. EVERLIGHT reserves the right(s) on the adjustment of product material mix for the specification.
2. The product meets EVERLIGHT published specification for a period of twelve (12) months from date of shipment.
3. The graphs shown in this datasheet are representing typical data only and do not show guaranteed values.
4. When using this product, please observe the absolute maximum ratings and the instructions for using outlined in these specification sheets. EVERLIGHT assumes no responsibility for any damage resulting from the use of the product which does not comply with the absolute maximum ratings and the instructions included in these specification sheets.
5. These specification sheets include materials protected under copyright of EVERLIGHT. Reproduction in any form is prohibited without obtaining EVERLIGHT's prior consent.
6. This product is not intended to be used for military, aircraft, automotive, medical, life sustaining or life saving applications or any other application which can result in human injury or death. Please contact authorized Everlight sales agent for special application request.

Copyright © 2010, Everlight All Rights Reserved. Release Date : Dece.23. 2016. Issue No: DAE-0000704 Rev.4

Ver.:4 Release Date:11/27/2018 承認:Approved(正式發行)