Technical Data Sheet

Bi-Color (Multi-Color) Top View LEDs

67-22UYSYGC/S530-A5/TR8



Features

- P-LCC-4 package.
- White package.
- Optical indicator.
- Colorless clear window.
- Ideal for backlight and light pipe application.
- Inter reflector.
- Wide viewing angle.
- Suitable for vapor-phase reflow.
- Computable with automatic placement equipment.
- Available on tape and reel (8mm Tape).
- Pb-free.
- The product itself will remain within RoHS compliant version

Descriptions

- The 67-22 series is available in soft orange, green,blue and yellow. Due to the package design, the LED has wide viewing angle and optimized light coupling by inter reflector. This feature makes ideal for light pipe application. The low current requirement makes this device ideal for portable equipment or any other application where power is at a premium.

Applications

- Telecommunication: indicator and backlighting in telephone and fax.
- Flat backlight for LCD's, switches and symbols.
- Light pipe application.
- General use.

Device Selection Guide

Chip			Resin Color
Type	Material	Emitted Color	
UY	AlGaInP	Brilliant Yellow	Water Clear
SYG	AlGaInP	Brilliant Yellow Green	

Ver.:4 Release Date:03/08/2017 狀態:Approved(正式發行)

Technical Data Sheet

Bi-Color (Multi-Color) Top View LEDs

67-22UYSYGC/S530-A5/TR8

Package Dimensions

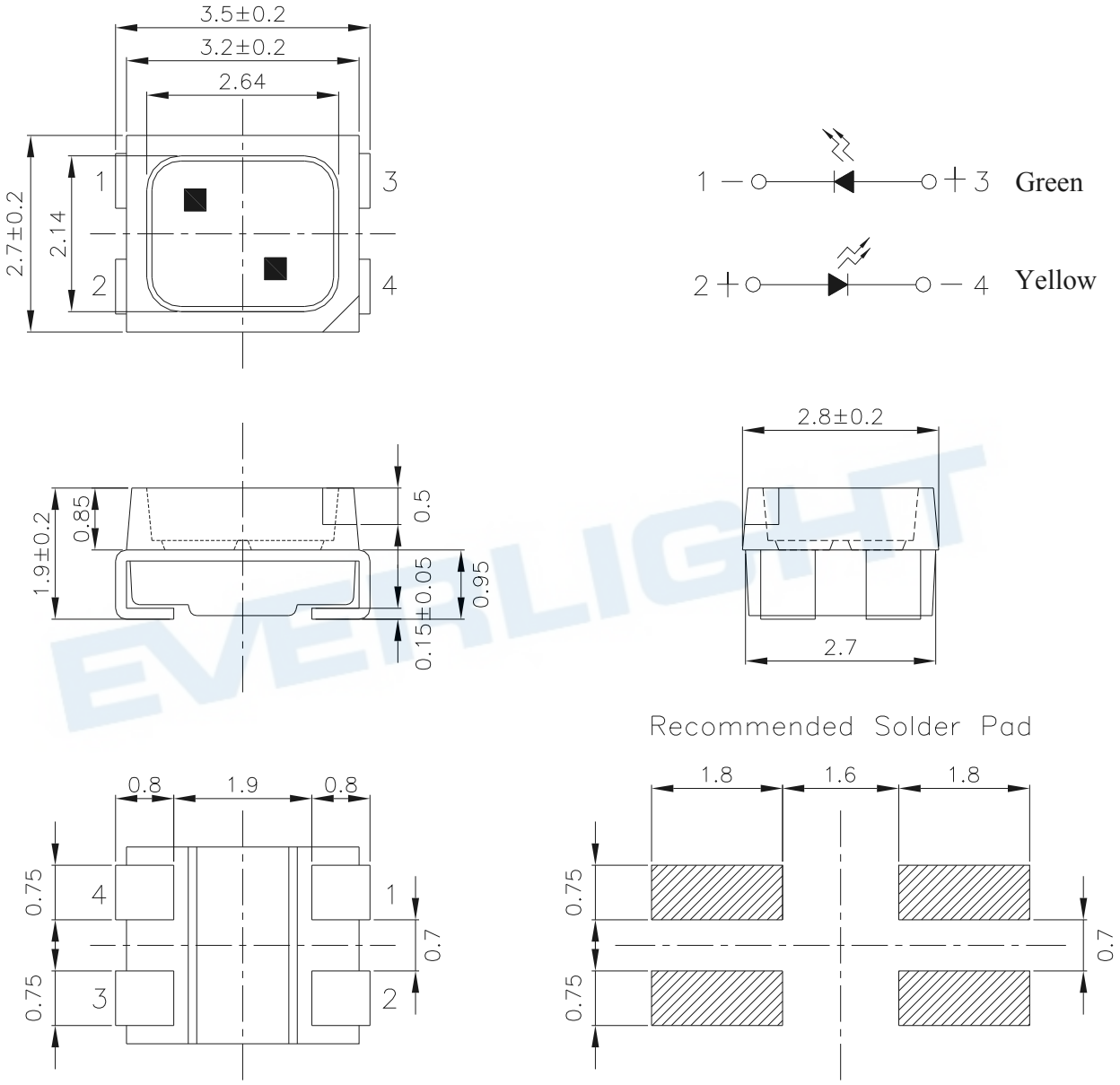

Note: The tolerances unless mentioned is ±0.1mm ;Unit = mm

Technical Data Sheet

Bi-Color (Multi-Color) Top View LEDs

67-22UYSYGC/S530-A5/TR8

Absolute Maximum Ratings (Ta=25℃)

Parameter	Symbol		Rating	Unit
Reverse Voltage	V_R		5	V
Forward Current	I_F	UY	25	mA
		SYG	25	
Peak Forward Current(Duty 1/10 @ 1KHz)	I_{FP}	UY	60	mA
		SYG	60	
Power Dissipation	Pd	UY	60	mW
		SYG	60	
Electrostatic Discharge(HBM)	ESD	UY	2000	V
		SYG	2000	
Operating Temperature	Topr		-40 ~ +85	℃
Storage Temperature	Tstg		-40~ +95	℃
Soldering Temperature	Tsol		Reflow Soldering : 260 ℃ for 10 sec. Hand Soldering : 350 ℃ for 3 sec.	

Ver.:4 Release Date:03/08/2017 狀態:Approved(正式發行)

Technical Data Sheet

Bi-Color (Multi-Color) Top View LEDs

67-22UYSYGC/S530-A5/TR8

Electro-Optical Characteristics (Ta=25℃)

Parameter	Symbol		Min.	Typ.	Max.	Unit	Condition
Luminous Intensity	I_V	UY	80	120	-----	mcd	I_F=20mA
		SYG	50	80	-----	mcd	
Viewing Angle	2θ1/2		-----	120	-----	deg	I_F=20mA
Peak Wavelength	λp	UY	-----	591	-----	nm	I_F=20mA
		SYG	-----	575	-----		
Dominant Wavelength	λd	UY	-----	589	-----	nm	I_F=20mA
		SYG	-----	573	-----		
Spectrum Radiation Bandwidth	△λ	UY	-----	20	-----	nm	I_F=20mA
		SYG	-----	20	-----		
Forward Voltage	V_F	UY	1.7	2.0	2.4	V	I_F=20mA
		SYG	1.7	2.0	2.4		
Reverse Current	I_R		-----	-----	10	μA	V_R=5V

Ver.:4 Release Date:03/08/2017 狀態:Approved(正式發行)

Typical Electro-Optical Characteristics Curves : (UY)

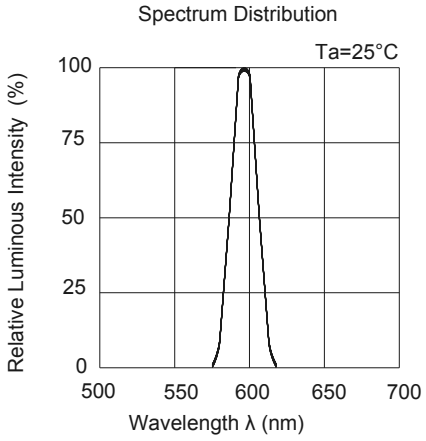

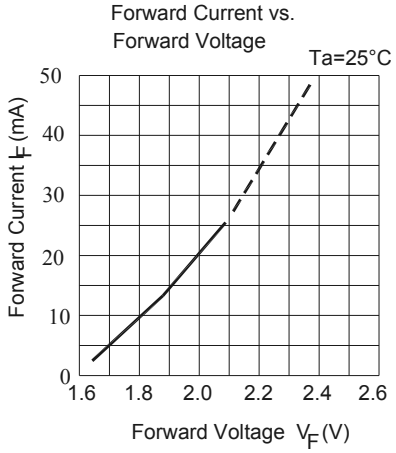

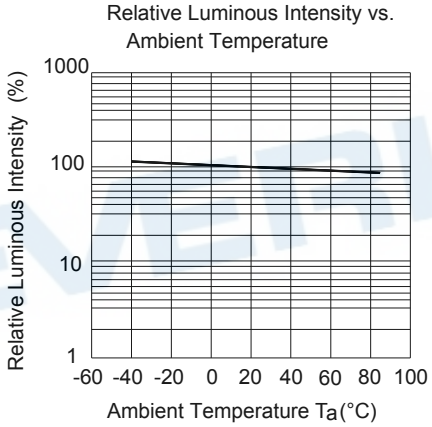

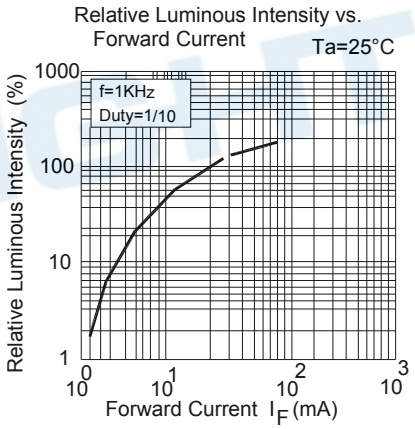

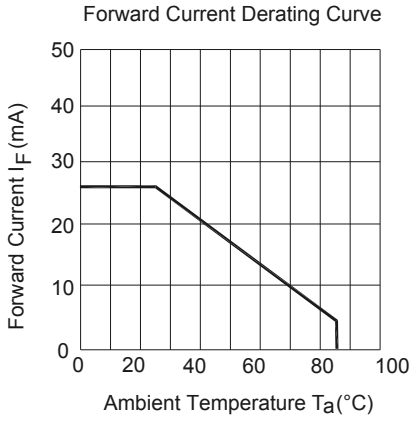

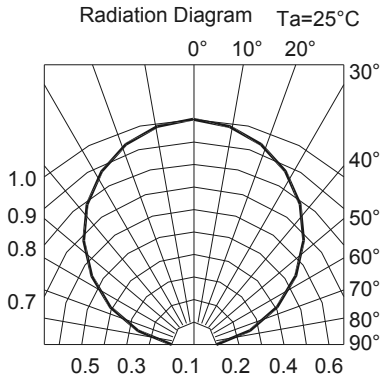

Typical Electro-Optical Characteristics Curves : (SYG)

Spectrum Distribution

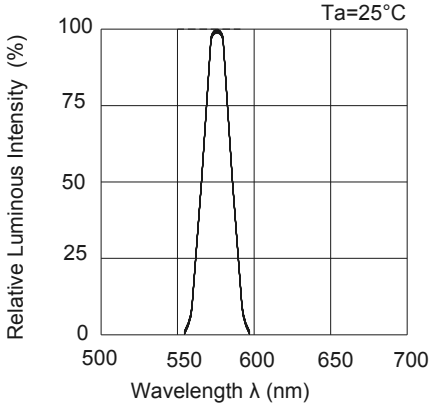

Forward Current vs. Forward Voltage

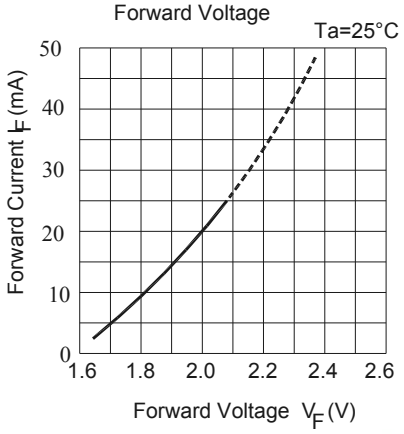

Relative Luminous Intensity vs. Ambient Temperature

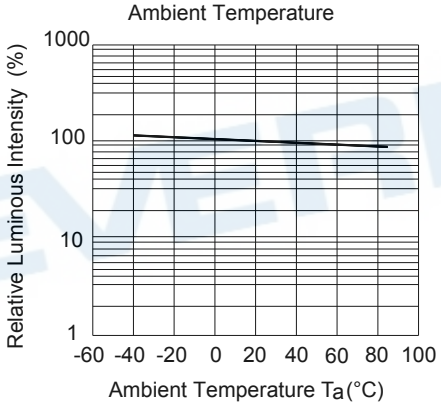

Relative Luminous Intensity vs. Forward Current

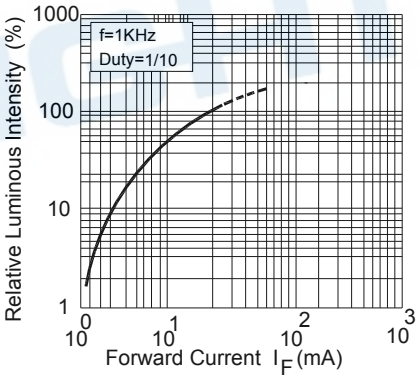

Forward Current Derating Curve

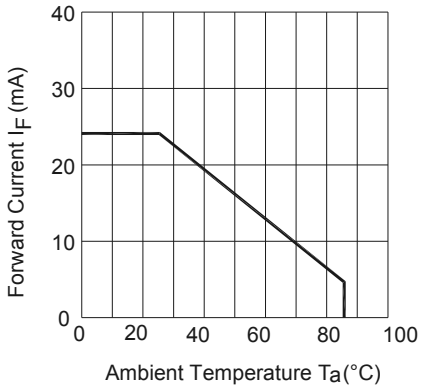

Radiation Diagram

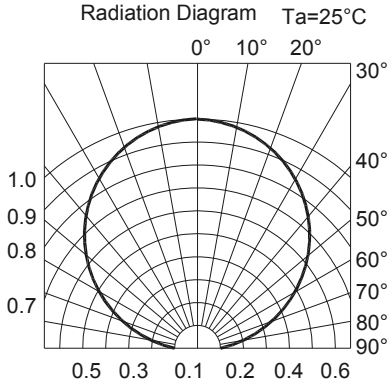

Technical Data Sheet

Bi-Color (Multi-Color) Top View LEDs

67-22UYSYGC/S530-A5/TR8

Label Explanation

CAT: Luminous Intensity Rank

HUE: Dom. Wavelength Rank

REF: Forward Voltage Rank

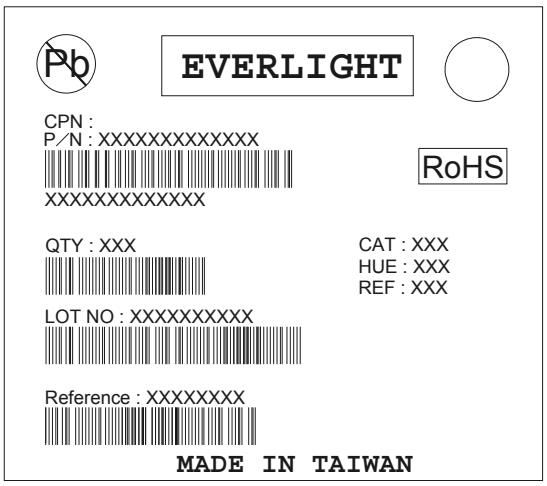

Reel Dimensions

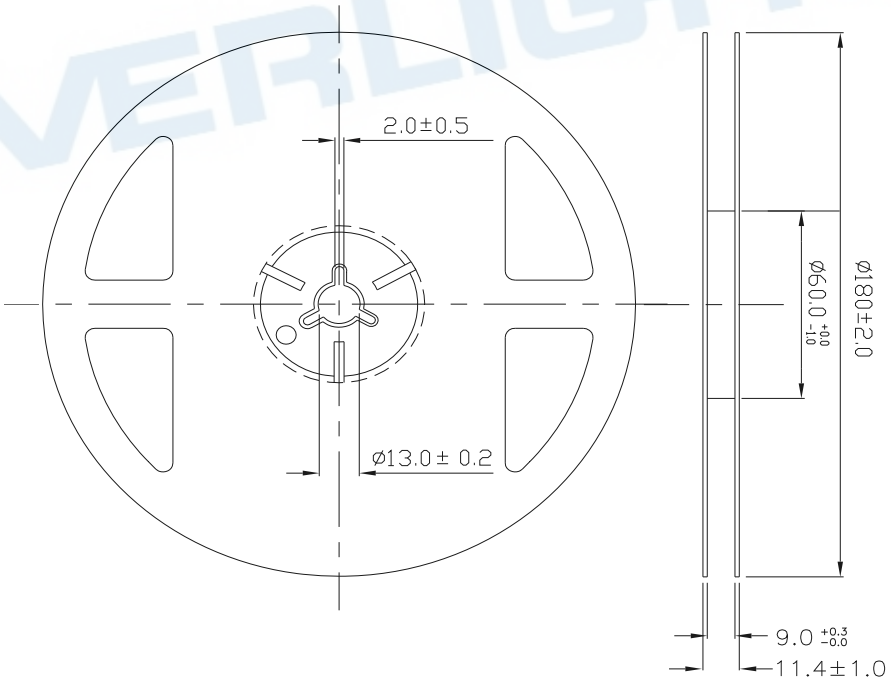

Note: The tolerances unless mentioned is ±0.1mm; Unit = mm

Ver.:4 Release Date:03/08/2017 狀態:Approved(正式發行)

Carrier Tape Dimensions: Loaded Quantity 2000 pcs Per Reel

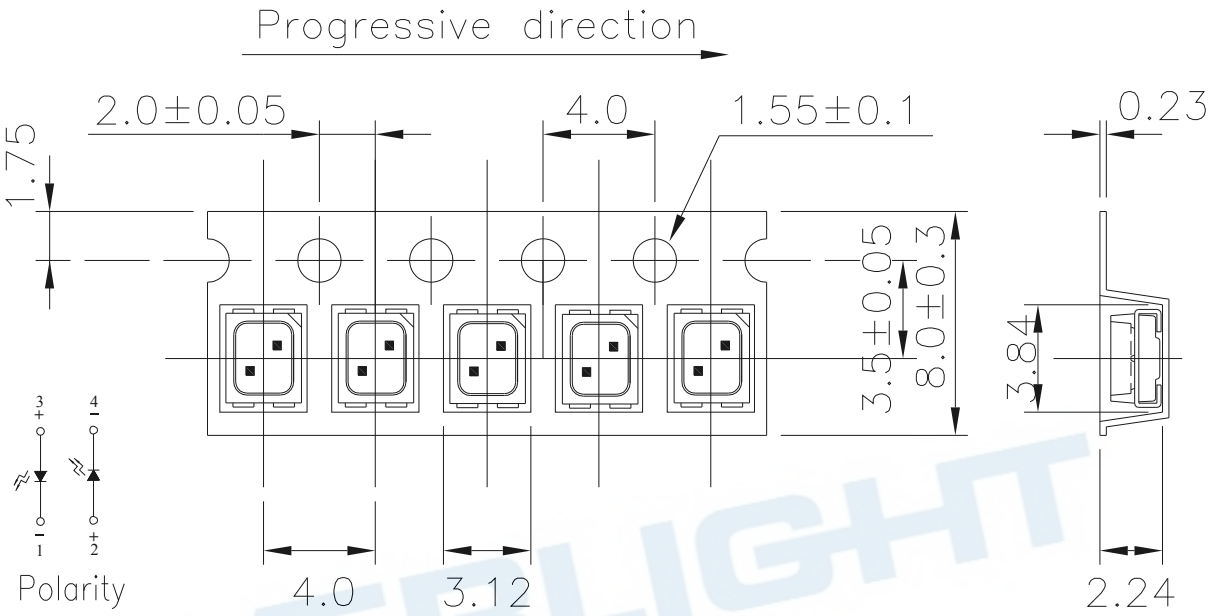

Note: The tolerances unless mentioned is ±0.1mm; Unit = mm

Moisture Resistant Packaging

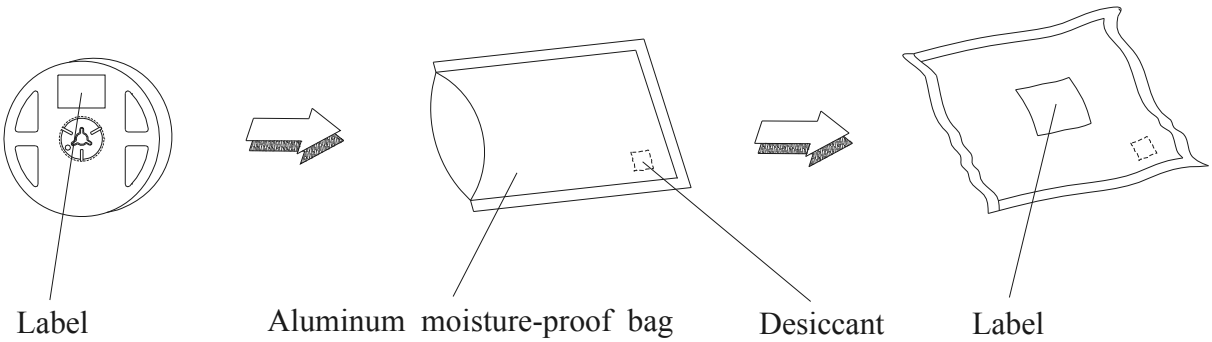

Reliability Test Items and Conditions

The reliability of products shall be satisfied with items listed below.
Confidence level：90%
LTPD：10%

No.	Items	Test Condition	Test Hours/Cycles	Sample Size	Ac/Re
1	Reflow Soldering	Temp. : 260℃±5℃ Max. 10 sec.	6 Min.	22 PCS	0/1
2	Temperature Cycle	H : +100℃ 15min ∫ 5 min L : -40℃ 15min	300 Cycles	22 PCS.	0/1
3	Thermal Shock	H : +100℃ 5min ∫ 10 sec L : -10℃ 5min	300 Cycles	22 PCS.	0/1
4	High Temperature Storage	Temp. : 100℃	1000 Hrs.	22 PCS.	0/1
5	Low Temperature Storage	Temp. : -40℃	1000 Hrs.	22 PCS.	0/1
6	DC Operating Life	I_F = 30 mA / 25℃	1000 Hrs.	22 PCS.	0/1
7	High Temperature / High Humidity	85℃/85%RH	1000 Hrs.	22 PCS.	0/1

Precautions for Use

1. Over-current-proof

   Customer must apply resistors for protection, otherwise slight voltage shift will cause big current change (Burn out will happen).

2. Storage

   2.1 Do not open moisture proof bag before the products are ready to use.

   2.2 Before opening the package: The LEDs should be kept at 30℃ or less and 90%RH or less.

   2.3 After opening the package: The LED's floor life is 168 hours under 30℃ or less and 60% RH or less.

   If unused LEDs remain, it should be stored in moisture proof packages.

   2.4 If the moisture absorbent material (silica gel) has faded away or the LEDs have exceeded the storage time, baking treatment should be performed using the following conditions.

   Baking treatment : 60±5℃ for 24 hours.

3. Soldering Condition

   3.1 Pb-free solder temperature profile

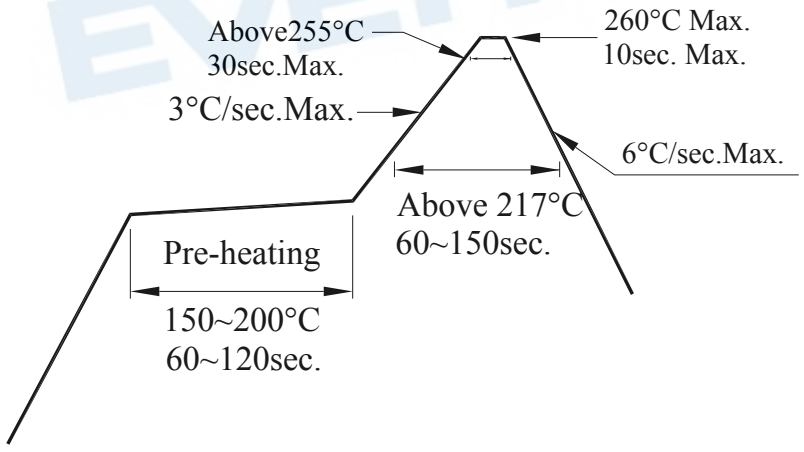

   3.2 Reflow soldering should not be done more than two times.

   3.3 When soldering, do not put stress on the LEDs during heating.

   3.4 After soldering, do not warp the circuit board.

4. Soldering Iron

Each terminal is to go to the tip of soldering iron temperature less than 350℃ for 3 seconds within once in less than the soldering iron capacity 25W. Leave two seconds and more intervals, and do soldering of each terminal. Be careful because the damage of the product is often started at the time of the hand solder.

5. Repairing

Repair should not be done after the LEDs have been soldered. When repairing is unavoidable, a double-head soldering iron should be used (as below figure). It should be confirmed beforehand whether the characteristics of the LEDs will or will not be damaged by repairing.

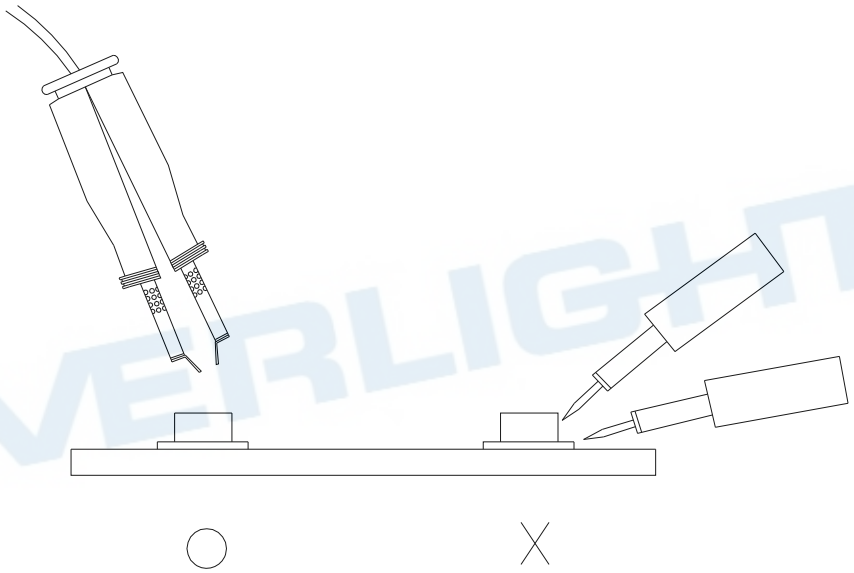

Technical Data Sheet

Bi-Color (Multi-Color) Top View LEDs

67-22UYSYGC/S530-A5/TR8

DISCLAIMER

1. EVERLIGHT reserves the right(s) on the adjustment of product material mix for the specification.
2. The product meets EVERLIGHT published specification for a period of twelve (12) months from date of shipment.
3. The graphs shown in this datasheet are representing typical data only and do not show guaranteed values.
4. When using this product, please observe the absolute maximum ratings and the instructions for using outlined in these specification sheets. EVERLIGHT assumes no responsibility for any damage resulting from the use of the product which does not comply with the absolute maximum ratings and the instructions included in these specification sheets.
5. These specification sheets include materials protected under copyright of EVERLIGHT. Reproduction in any form is prohibited without obtaining EVERLIGHT's prior consent.
6. This product is not intended to be used for military, aircraft, automotive, medical, life sustaining or life saving applications or any other application which can result in human injury or death. Please contact authorized Everlight sales agent for special application request.

EVERLIGHT ELECTRONICS CO., LTD.
Office: No 25, Lane 76, Sec 3, Chung Yang Rd,
Tucheng, Taipei 236, Taiwan, R.O.C
Tel: 886-2-2267-2000, 2267-9936
Fax: 886-2267-6244, 2267-6189, 2267-6306
http://www.everlight.com

Ver.:4 Release Date:03/08/2017 狀態:Approved(正式發行)