拓展光电
TUOZHAN OPTOELECTRONICS

# 深圳市拓展光电有限公司

SHENZHEN DEVELOPMENT PHOTOELECTRIC CO., LTD

# SPECIFICATION

**Model:** 2835UVA365L-003

**Date:** 2020/12/19

**NO:** SZTZ-DS-UVA-004

**Par NO**: F.28.00001

| 承制方确认 | | | |
|---|---|---|---|
| 制作 | 审核 | 业务 | 品质 |
| | | | |

| 接受方确认 | | | |
|---|---|---|---|
| 工程制定 | 工程审核 | 采购 | 品质 |
| | | | |

拓展光电
TUOZHAN OPTOELECTRONICS

| 版本 | 修订日期 | 文件修订内容 | 备注 |
|---|---|---|---|
| A0 | 2020/12/19 | 首次发行 | 魏峰 |
| | | | |
| | | | |
| | | | |
| | | | |
| | | | |
| | | | |
| | | | |
| | | | |
| | | | |
| | | | |
| | | | |
| | | | |
| | | | |
| | | | |
| | | | |
| | | | |
| | | | |
| | | | |

| | | | | |
|---|---|---|---|---|
| 制作 | 胡满意 | 日期 | 2020年12月19日 | |
| 核准 | 魏峰 | 日期 | 2020年12月19日 | |
| 版本号 | A0 | 受控日期 | 2020年12月19日 | |

# 2835UVA365L-003 Datasheet



The 2835 LED light source is a high-performance energy-saving device that can handle high heat and high drive current.Small size, high strength, is the ideal choice of LED nail lamp, LED mosquito lamp, LED lamp, curing, etc.
此款2835 LED光源是一种高性能节能器件，可以处理高热量和高驱动电流。体积小、强度高，是LED指甲灯、LED蚊香灯、LED灯、固化灯等的理想选择。

The Purple LED light source with peak wavelength ranging from 365nm to385nm.
紫外LED光源峰值波长为365nm ~ 385nm。

This part has a foot print that is compatible to most of the same size LED in the market today.
此器件的焊盘兼容当今市场上大部分相同大小的LED。

## FEATURES/特点

- Available in 365-375nm, and 375-385nm color
  有365-375nm和375-385nm两种颜色可供选择
- High luminous Intensity and high efficiency
  发光强度高，效率高
- Compatible with reflow soldering process
  兼容回流焊工艺
- Low thermal resistance/热阻低
- Long operation life/寿命长
- Wide viewing angle at 120°
  120° 大发光角度
- Silicone encapsulation/硅胶封装
- Environmental friendly, RoHS compliance
  材质环保，符合RoHS要求

## APPLICATIONS/应用

- Nail lamp/指甲灯
- Curing light/光固化
- Mosquito lamp/诱蚊灯
- LED bulb/LED灯泡
- money detector/验钞
- The sterilization lamp/杀菌灯
- The stage lights/舞台灯光
- Clothing lights/服装灯光
- The scorpion lamp/蝎子灯

Note: The information in this document is subject to change without notice.
注：本文件中的信息如有变更，恕不另行通知。

## PACKAGE DIMENSIONS 封装尺寸

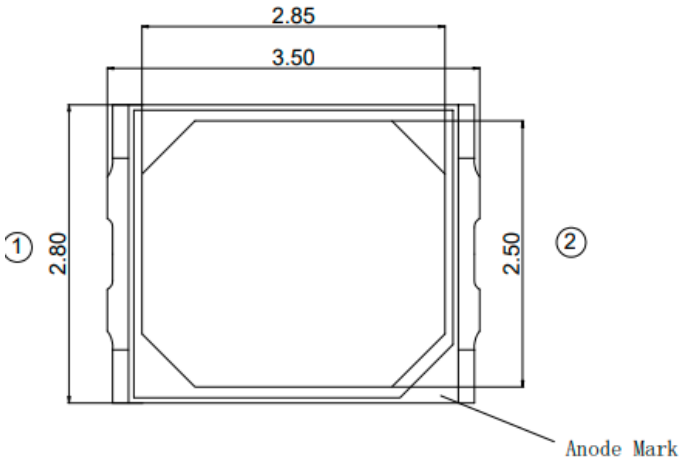


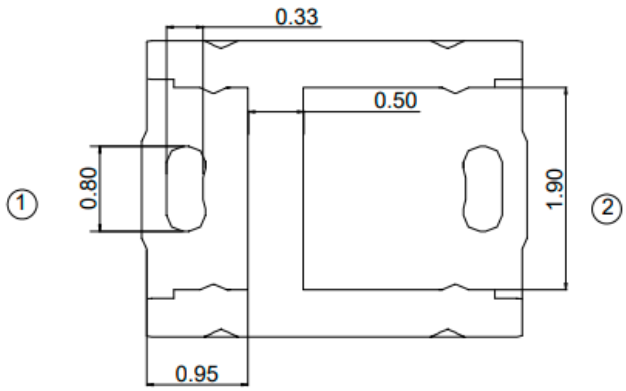


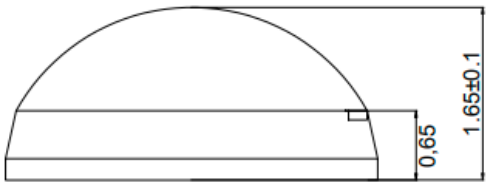


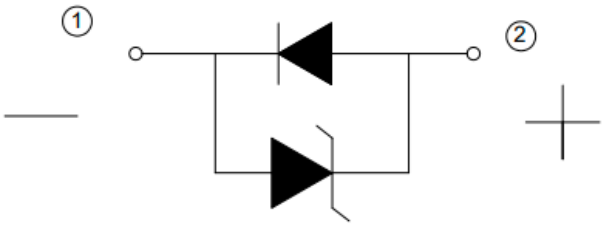


## Recommended Solder Pad Design 推荐焊盘设计

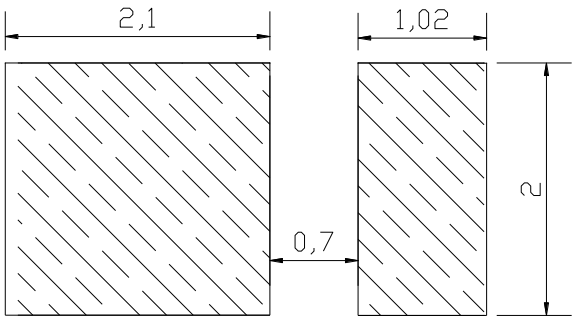


Notes/ 注:

1. All dimensions in millimeters.所有尺寸单位为mm
2. Thickness tolerance of copper plate is ±0.02mm. 铜材料片厚度公差为±0.02mm
3. Thickness tolerance of product is ±0.05mm. 产品厚度公差为±0.05mm
4. Tolerance is ±0.1mm unless otherwise noted. 如未特别注明，默认公差为±0.1mm

## ABSOLUTE MAXIMUM RATINGS最大限定参数（Ta=25℃）

| Parameter 项目名称 | Symbol 符号 | Value 规格 | Unit 单位 |
|---|---|---|---|
| Forward current 正向电流 | $I_F$ | 150 | mA |
| Peak Forward Current 正向脉冲电流 | $I_{FP}$ | 180 | mA |
| Reverse Voltage 反向电压 | $V_R$ | 5 | V |
| Power Dissipation 消耗功率 | Pd | 500 | mW |
| Operating Temperature 工作温度 | $T_{opr}$ | -40~+85 | ℃ |
| Storage Temperature 储存温度 | $T_{stg}$ | -40~+100 | ℃ |
| Soldering Temperature 焊接温度 | $T_{sld}$ | Reflow Soldering: 260℃ for 10 seconds | |
| LED Junction Temperature 结温 | $T_j$ | 110 | ℃ |

## CHARACTERISTICS 光电参数(Ta=25℃)

| Parameter 项目名称 | Symbol 单位 | Condition 条件 | Min 最小值 | Typ 中间值 | Max 最大值 | Unit 单位 |
|---|---|---|---|---|---|---|
| Reverse Current反向漏电流 | $I_R$ | $V_R$=5V | -- | -- | 3 | uA |
| Forward Voltage正向电压 | $V_F$ | $I_F$=150mA | 3.4 | 3.6 | 4.0 | V |
| Viewing Angle发光角度 | $2\theta_{1/2}$ | $I_F$=150mA | -- | 120 | -- | deg. |
| Radiant Flux辐射通量 | Φe | $I_F$=150mA | 150 | 200 | 250 | mW |
| peak wavelength峰值波长 | λP | $I_F$=150mA | 365 | -- | 375 | nm |
| Thermal Resistance热阻 (Junction to Solder Point) | $R_{th-js}$ | $I_F$=150mA | -- | 15 | -- | ℃/W |

Notes/注:
1. Radiant Flux is measured with an accuracy of ± 5%. 辐射功率的测量精度为± 5%。
2. peak wavelength is measured with an accuracy of ± 5%. 峰值波长的测量精度为± 5%。
3. All measurements were made under the standardized environment of Tuozhan
所有的测量都是在拓展的标准环境下进行的

## RELATIVE SPECTRAL POWER DISTRIBUTION 相对光谱功率分布 ($T_j$=25℃)

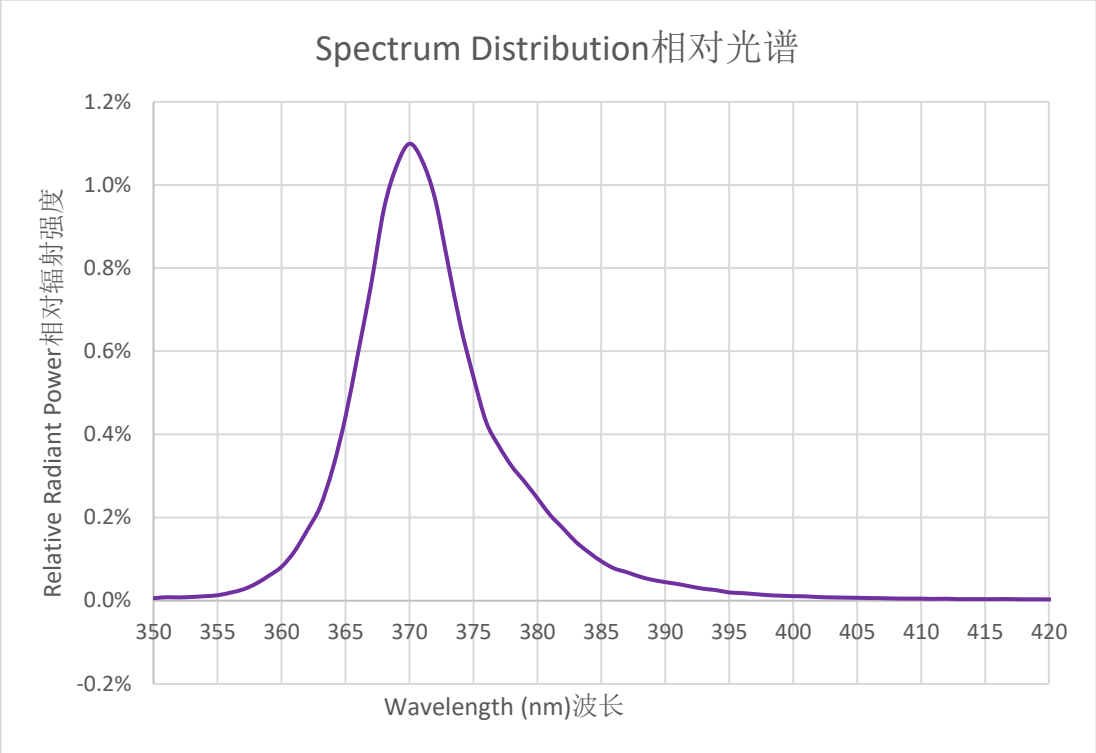


## TYPICAL SPATIAL DISTRIBUTION典型配光分布

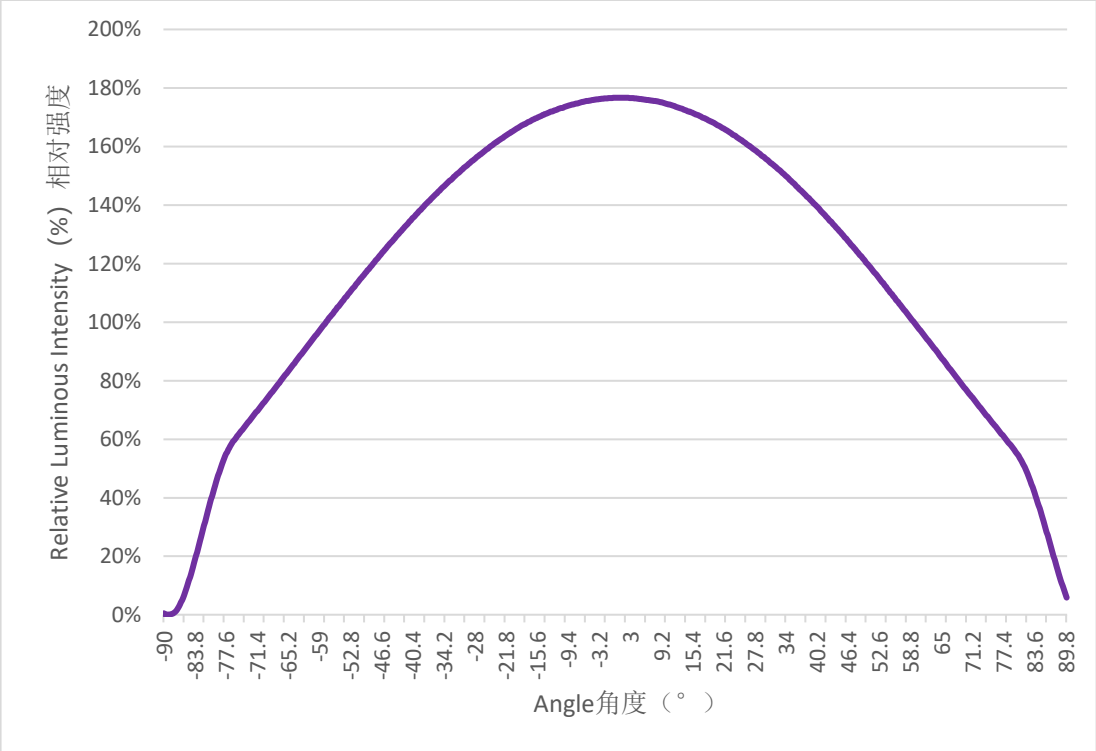

## LUMINOUS INTENSITY VS. CURRENT相对辐射通量VS电流 ($T_j$=25℃)

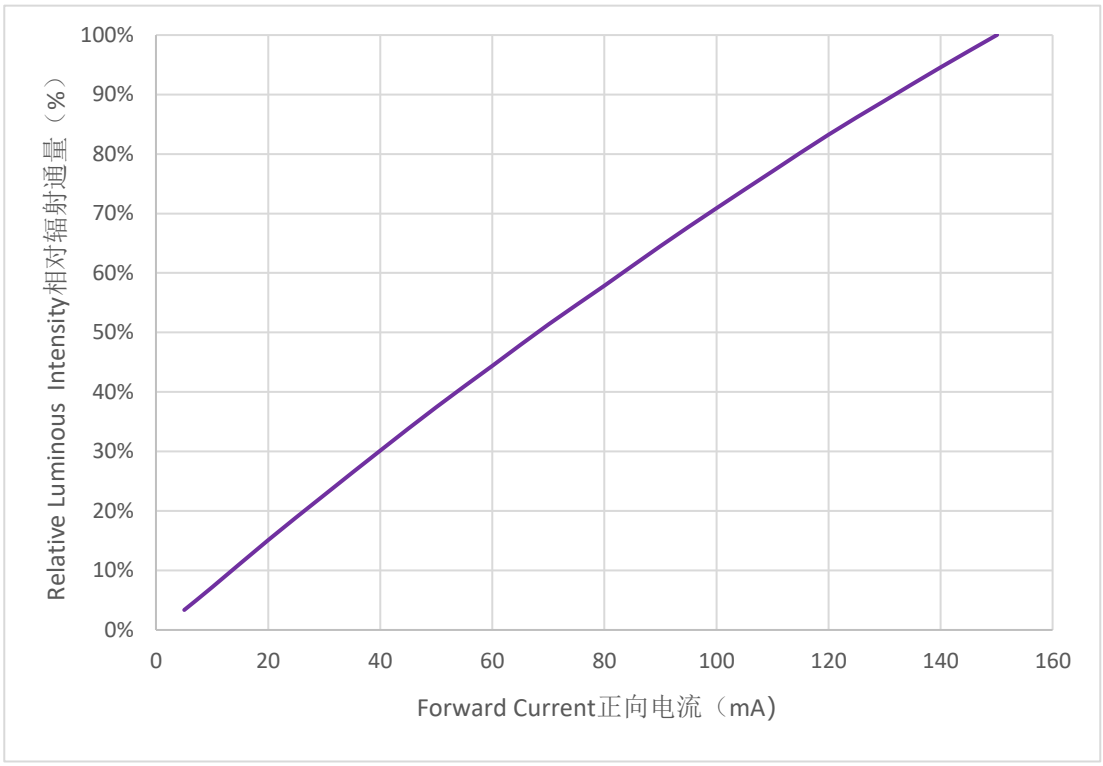


## ELECTRICAL CHARACTERISTICS 电特性(Tj=25℃)

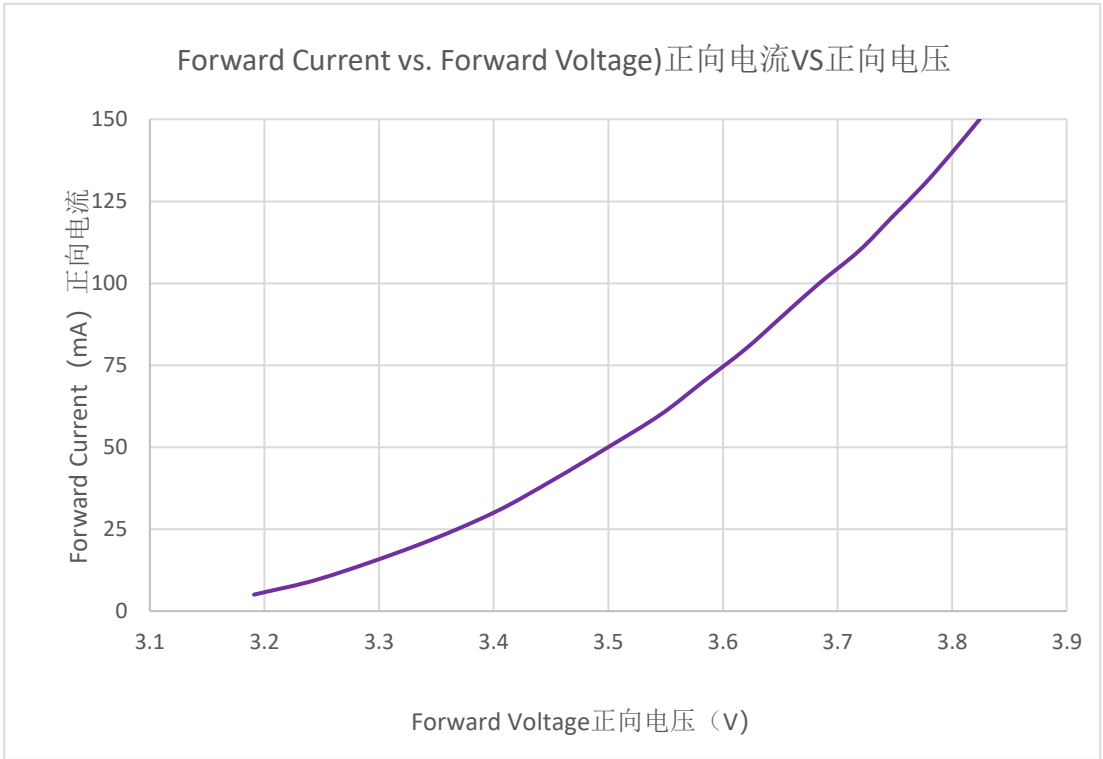

## Temperature Vs. Peak Wavelength温度与峰值波长的关系

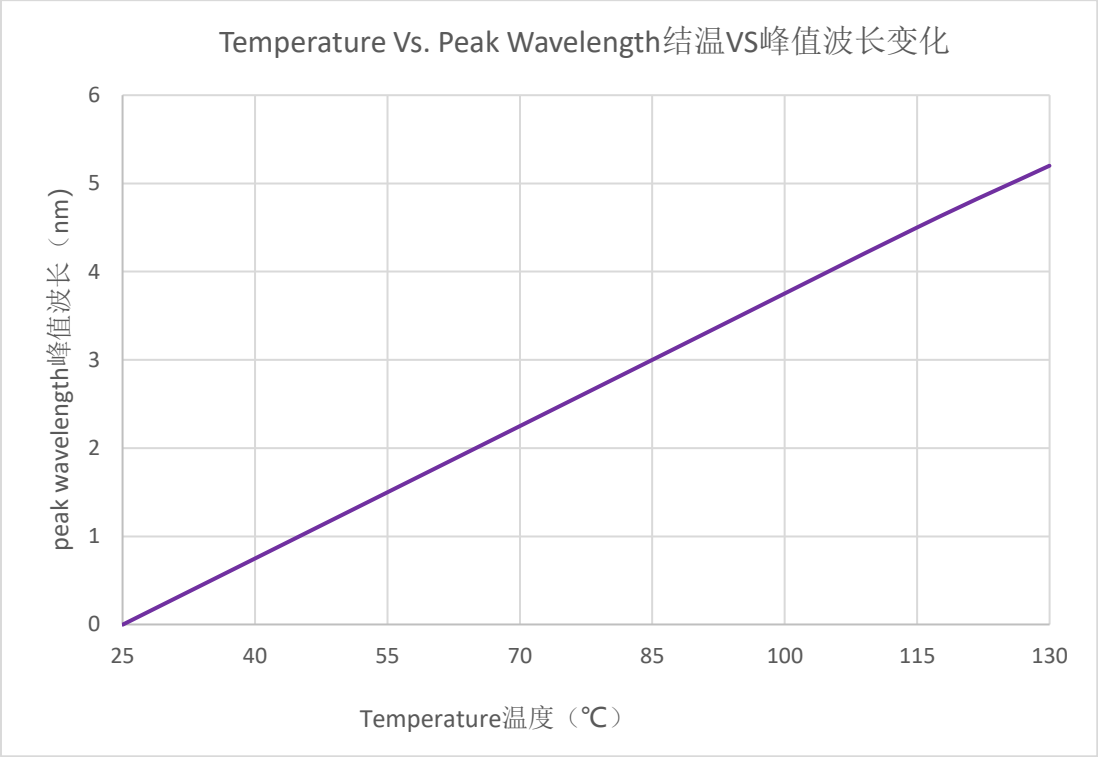


## RELATIVE LUMINOUS Lntensity VS. TEMPERATURE相对辐射通量与结温的关系

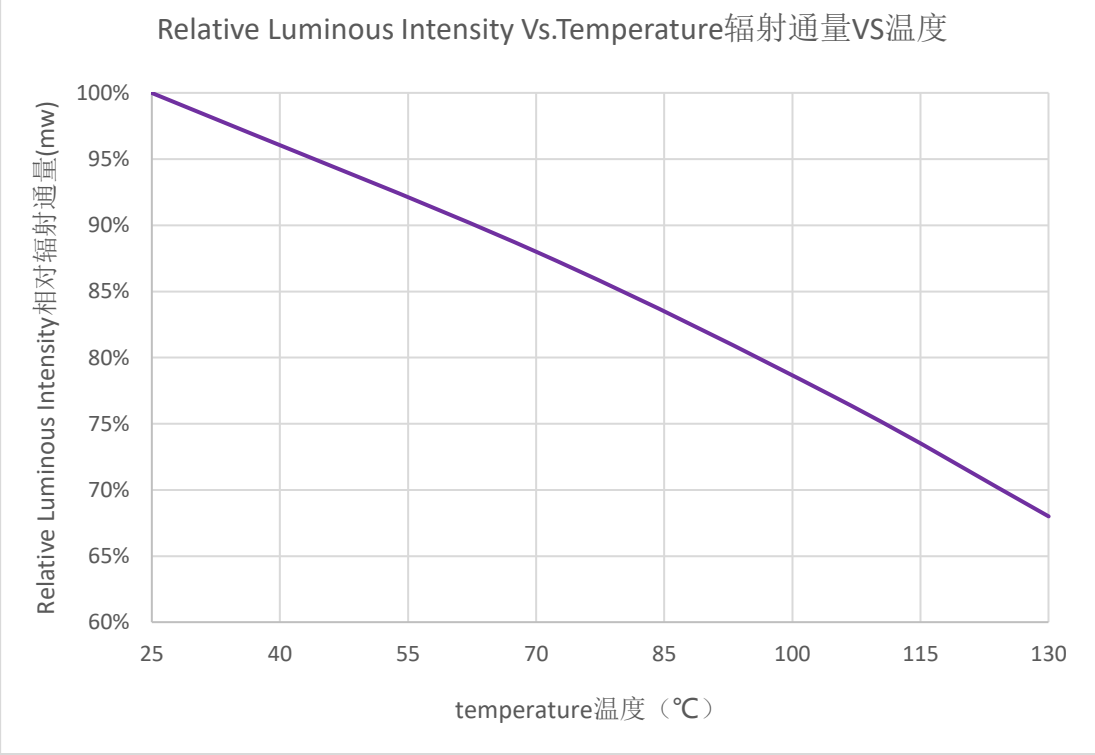

## SORTING RANKS分光等级

### (1) Luminous Intensity辐射功率 (Tj=25℃)

| Part Number型号 | Condition条件 | Rank等级 | | Unit单位 |
|---|---|---|---|---|
| 2835UVA365L-003 | 150mA | Q50 | Q60 | mW |
| | | 150-160 | 160-170 | |
| | | Q70 | Q80 | |
| | | 170-180 | 180-190 | |
| | | Q90 | R00 | |
| | | 190-200 | 200-210 | |
| | | R10 | R20 | |
| | | 210-220 | 220-230 | |
| | | R30 | R40 | |
| | | 230-240 | 240-250 | |

### (2) Forward Voltage正向电压 (Tj=25℃)

| Rank等级 | Condition条件 | Min最小值 | Max最大值 | Unit单位 |
|---|---|---|---|---|
| BC | 150mA | 3.4 | 3.6 | V |
| BD | | 3.6 | 3.8 | |
| BE | | 3.8 | 4.0 | |

### (3) peak wavelength峰值波长 (Tj=25℃)

| Part Number型号 | Condition条件 | Rank等级 | | Unit单位 |
|---|---|---|---|---|
| 2835UVA365L-003 | 150mA | SB | SC | nm |
| | | 365-370 | 370-375 | |
| | | SE | SF | |
| | | 375-380 | 380-385 | |

Notes/注:
1. 5% tolerance for radiant flux may be caused by measurement inaccuracy.
光辐射功率测量精度误差± 5%
2. Measurement Uncertainty of the Forward Voltage : ± 0.05V
正向电压测量误差:± 0.05

## REFLOW SOLDERING CHARACTERISTICS 回流焊特性

### For Reflow Process 回流焊制程:

Preheating预热 : 140℃~160℃±5℃,within 2 minutes. 2分钟

Operation heating作业加热 : 260℃(Max.) within 10 seconds.(Max)

260℃(最高) within 10 seconds.(最长)

Gradual Cooling (Avoid quenching).逐渐冷却(避免淬火)

| Lead solder 有铅焊接 | | Lead-free solder 无铅焊接 | |
|---|---|---|---|
| Pre-heat 预热 | 120-150℃ | Pre-heat 预热 | 150-200℃ |
| Pre-heat time 预热时间 | 120 sec.Max. | Pre-heat time 预热实际那 | 120 sec.Max. |
| Peak Temperature 峰值温度 | 240℃ Max. | Peak Temperature 峰值温度 | 260℃ Max. |
| Soldering time condition 回流焊时间 | 10 sec.Max. | Soldering time condition 回流焊时间 | 10 sec.Max. |

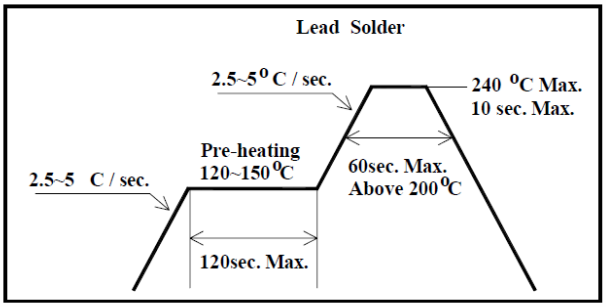


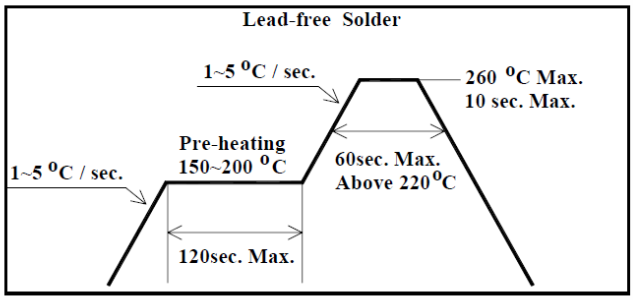


Notes注:

The encapsulated material of the LEDs is silicone . Therefore the LEDs have a soft surface on the top of package. The pressure to the top surface will be influence to the reliability of the LEDs. Precautions should be taken to avoid the strong pressure on the encapsulated part. So when using the picking up nozzle, the pressure on the silicone resin should be proper.

由于LED的封装材料是硅胶，led封装顶部表面是柔软的，顶部表面的压力会影响led的可靠性。应采取预防措施，以避免密封部件受到强大的压力。因此，在使用吸嘴时，应使硅胶表面的压力适中。

## TAPE AND REEL 编带

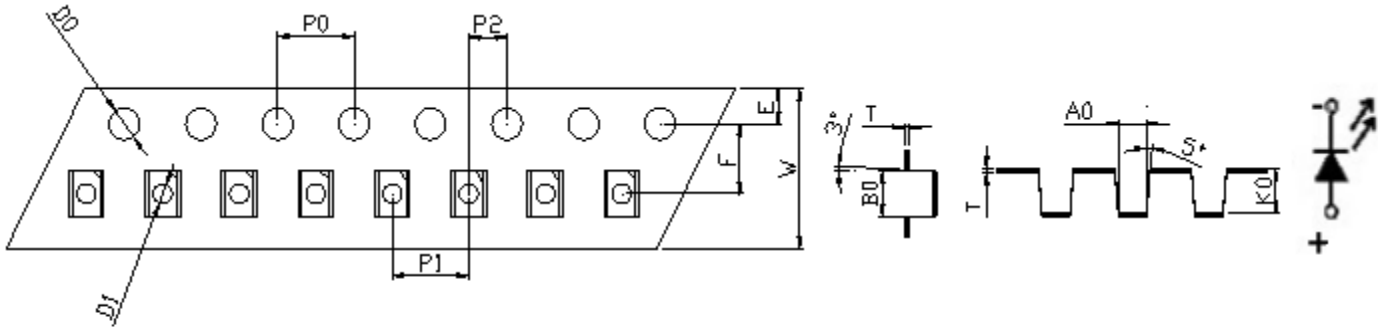


| W | T | A0 | B0 | K0 | D0 | D1 | E | F | P0 | P1 | P2 | 10P0 |
|---|---|---|---|---|---|---|---|---|---|---|---|---|
| 8.00±0.10 | 0.25±0.03 | 3.10±0.10 | 3.75±0.10 | 2.00±0.10 | 1.60+0.05 | 1.10+0.05 | 1.75±0.10 | 3.50±0.10 | 4.00±0.10 | 4.00±0.10 | 2.00±0.10 | 40.00±0.2 |

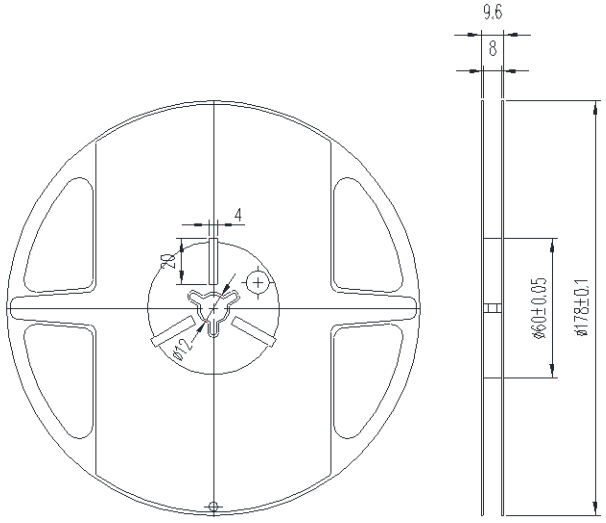


Note: The tolerances unless mentioned is ±0.1mm, Unit=mm

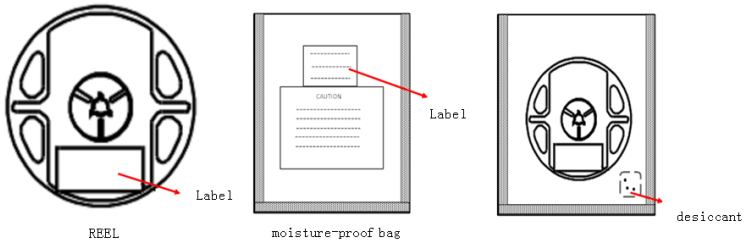


Notes注:

(1) Quantity : 2,000pcs/Reel
数量：2000pcs/卷

(2) Cumulative Tolerance : Cumulative Tolerance/10 pitches to be ±0.2mm
累积公差:累积公差/10间距 ±0.2毫米

(3) Adhesion Strength of Cover Tape : Adhesion strength to be 0.1-0.7N when the cover tape is turned off from the carrier tape at the angle of 10º to the carrier tape
盖带粘附强度:盖带反向拉，与载带角度为10°，拉力为0.1-0.7N

(4) Package : P/N, Manufacturing data Code No. and quantity to be indicated on a damp proof Package.
包装 :品名，生产数据代码和数量须在防潮包装上注明

## Reliability Test Items 可靠性测试项目

| Test Items 测试项目 | Test Duration 测试时长 | Number of Damaged 不良数 |
|---|---|---|
| Steady State Operating Life of High Temperature (HTOL) Ts=85℃, IF=Max 高温点亮稳态老化Ts=85℃, IF=最大值 | 1000hrs | 0/20 |
| Steady State Operating Life of Low Temperature (LTOL) Ta=-40℃, IF=Max 低温点亮稳态老化Ts=85℃, IF=最大值 | 1000hrs | 0/20 |
| Pulse Wet Operating Life of High Temperature (PWHTOL) 高温高湿通断电老化 60℃/90%RH, IF30mins ON/30min OFF | 500hrs | 0/20 |
| High Temperature Storage (HTS) 高温存储 100℃ | 1000hrs | 0/20 |
| Low Temperature Storage (LTS) 低温存储 -40℃ | 1000hrs | 0/20 |
| Thermal Shock (TS) -45℃~125℃ 30min dwell 20sec transfer 冷热冲击-45℃ 30min~125℃ 30min ， 转换时间20秒 | 300cycles | 0/20 |
| Solder Resistance (SR) 265℃, 3X MSL 阻焊测试（3遍潮气敏感度试验后） | 5sec | 0/20 |
| Solder Ability (SA) 245℃5sec, 95% coverage 可焊性 95%覆盖 | 5sec | 0/11 |
| Mechanical Shock (MS) 1500G 0.5msec pulse shock 机械冲击(MS) 1500G 0.5毫秒脉冲冲击 | Each6 axis | 0/6 |
| Random Vibration (RV) 随机振动 6G RMS, 10-2000Hz, 10min | Per axis | 0/6 |
| Variable Vibration Frequency (VVF) 10-2000-10Hz, log or linear sweep rate, 20G for 1 min, 1.5mm each apply 3x per axis over 变频振动(VVF) 10-2000-10Hz，对数或线性扫频，20G, 1分钟，1.5mm，每轴3遍以上 | 6hrs | 0/6 |
| Salt Spread (SS) 35℃, 30g/m2/day 盐雾试验35℃,30克/平方米/天 | 48hrs | 0/11 |

| Item 项目 | Symbol 符号 | Test Condition 测试条件 | Criteria for Judgment 判定标准 | |
|---|---|---|---|---|
| | | | Min. 最小 | Max. 最大 |
| Forward Voltage 正向电压 | $V_F$ | IF=Typical Current 典型电流 | | U.S.L x1.1 |
| Luminous Intensity 光功率 | mW | IF=Typical Current | L.S.L x0.7 | |
| peak wavelength 峰值波长 | nm | IF=Typical Current | | U.S.L x1.1 |

## PRECAUTION FOR USE 使用注意事项

(1) This device should not be used in any type of fluid such as water, oil, organic solvent, etc. When washing is required, IPA should be used.
本器件不得用于水、油、有机溶剂等任何流体中。如需清洁，请使用异丙醇进行清洗。

(2) When the LEDs are illuminating, operating current should be decided after considering the ambient maximum temperature.
当LED发光工作时，应根据环境最高温度来确定工作电流。

(3) LEDs must be stored to maintain a clean atmosphere. If the LEDs are stored for 3months or more after being shipped from TuoZhan, a sealed container with a nitrogen atmosphere should be used for storage.
LED储存环境须保持清洁。如果LED从拓展发货后需储存3个月或更长时间，则应使用氮气柜进行储存。

(4) The LEDs must be used within seven days after opening the moisture proof packing. Repack unused Products with anti-moisture packing, fold to close any opening and then store in a dry place.
LED须在打开防潮包装后七天内使用。用防潮包装重新包装未使用的产品，折叠以封住开口，然后存放在干燥的地方。

(5) The appearance and specifications of the product may be modified for improvement without notice.
产品外观及规格如有改进，恕不另行通知。

(6) This LED is sensitive to the static electricity and surge. It is recommended to use a wrist Band or anti-electrostatic glove when handling the LEDs.
LED对静电和浪涌很敏感。在处理LED时，建议使用防静电腕带或防静电手套。

(7) On manual soldering, a solder tip must be needed as grounded for usage. If over voltage which exceeds the absolute maximum rating is applied to LEDs, it will cause damage LEDs and result in destruction. Damaged LEDs will show some unusual characteristics such as leak current remarkably increase ,turn-on voltage becomes lower and the LEDs get unlighted at low current.
手工焊接时，焊接头必须接地。如果对led施加超过绝对最大额定值的过电压，会对led造成损坏。损坏的led会出现一些不寻常的特性，如漏电流明显增加，接通电压降低，低电流时led不亮。

(8)Warm prompt “The UV damage eyes，Do not stare at the light source，And don't shine a light into someone's eyes”
温馨提示：“UV伤眼！不要盯着光源看，也不要用光源照射别人的眼睛！”

