深 圳 市 深 宏 电 子 有 限 公 司

SHENZHEN SHENHONG OPTOELECTRONICS CO；LTD

承认书

SPECIFICATION FOR APPROVAL

客户名称 Customer name：深圳市立创电子商务有限公司

产品名称 Product name：5MM 红发红雾状短脚

产品型号 The product model ：91107003

样品编号 Sample Numbers：

客户编号 Customer Numbers：

日　　期 Date：2023-4-25

深圳市深宏电子有限公司 SHENZHEN SHENHONG OPTO ELECTRONICS CO；LTD		
品质部 Quality Dept	工程部 Engineering Dept	市场部 Marketing Dept

说明：

致执事者：兹提供敝公司产品之有关详细规格及图面资料，敬请给予办理测试确定，同时敬请送返一份有贵司签认之测试确认后样品确认书。

客户确认签名 Customers confirmation signature			
工程部 Engineering Dept		品质部 Quality Dept	

地址：

广东省深圳市宝安区松岗街道朗下社区沙江路 314 号稳丰工业园 A 栋 3 楼

3rd Floor, Building A, Wenfeng Industrial Park, No. 314 Shajiang Road, Langxia Community, Songgang Street,Bao'an District, Shenzhen City, Guangdong Province

电话（Tel）:0755-81766501/29719689/29719996　　传真（Fax）:0755-81766538

Http://www.ledshenhong.com　　E-mail:shenhongled@126.com

Production Specification（生产规格）

型号 **Model:**	91107003	

Outline Dimensions(外形尺寸)

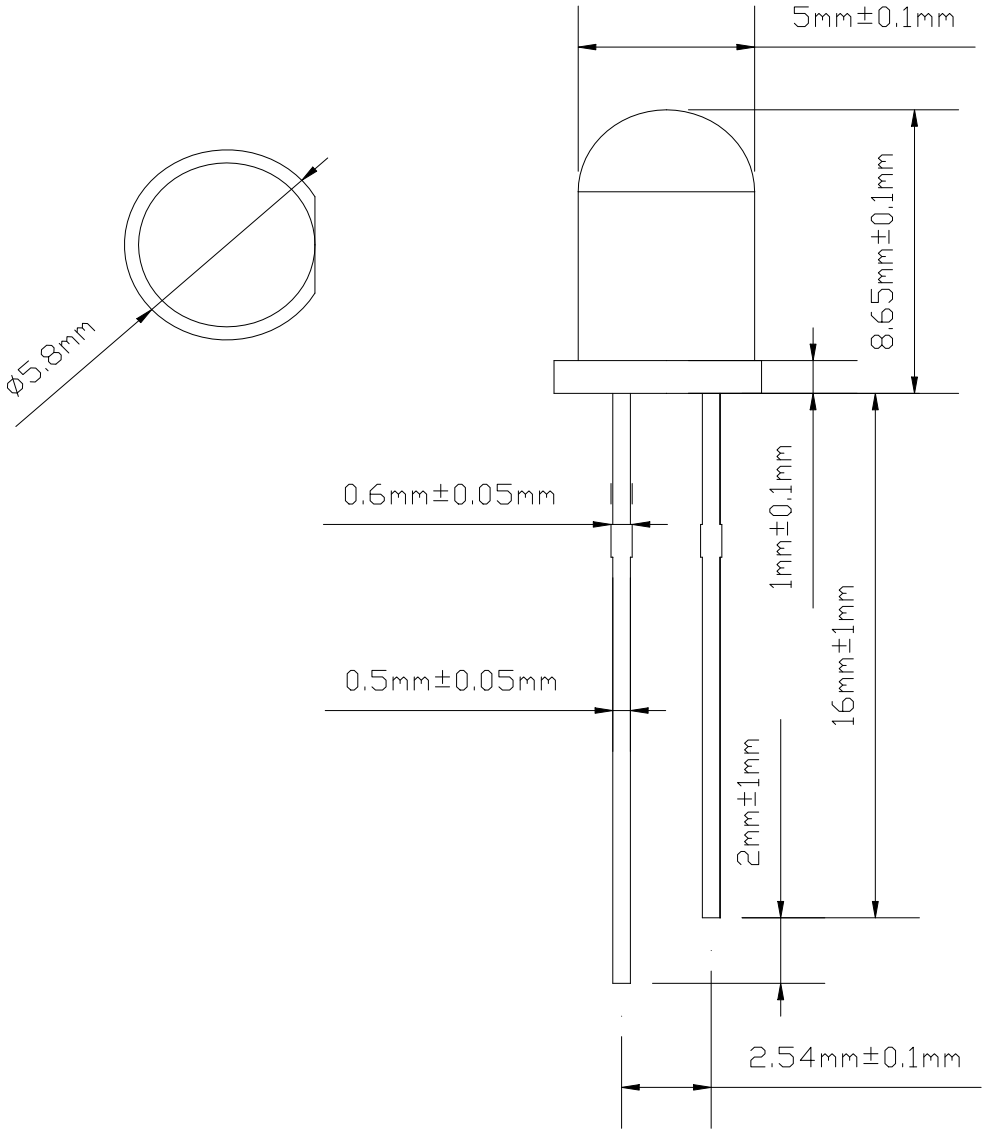

单位 Units	圖面未注公差 Encapsulation Tolerance	胶体外观公差 Encapsulation tolerance	胶体伸出尺寸(NOTE) Dimensions of protruded flange
mm	**±0.25**		

※备注：承认书编号和型号可用于查询，客户如有需要，请提供相应的编号和型号名。

Remark:P/N & Model in samples approval sheet can be used to inquire'please provide corresponding P/N & Model if customer need.

§封装标准 Packaging Standard 5 mm.

項目 ITEM		封装外形样式 PACKAGE TYPE	透镜外表 Lens appearance	物料 MATERIALS
樹脂模 Resin(Mold)		A	彩色扩散 Colored Diffused	環氧樹脂 Epoxy
顏色代碼 Lens Color Code	Red	B		色素 pigment
	Yellow	C	白色扩散 White Diffused	環氧樹脂 Epoxy
	Blue	W		扩散剂 Diffuser agent
	Green	R	水透明 Water Transparent	環氧樹脂 Epoxy
	White	S		-----
		F	彩色透明 Colored Transparent	環氧樹脂 Epoxy
		H		色素 pigment
支架（引線）Lead Frame		--	银色 silver	Ag Plating Iron Alloy
芯片材料 Die material		--	方片 Dice	GaAsP/GaP

※封装外形样式 PACKAGE TYPE：A：联式 Array、B：圆头 Round head 、C:：圆柱形（含内凹）Cylindrical、w:椭圆形 Oval、R:方形 Rectangular、s:塔形 Tower、F：食人鱼 LED Piranha LED 、 H:贴片 LED SMD LED 。

§ 最大额定值 Absolute Maximum Ratings(Ta=25℃).

（环境温度 Ambient temperature:25℃ 温度 humidity:RH60%

项目 Item	符号 Symbol	数值 Value	单位 Unit	备注 Remark
功率消耗(Power Dissipation)	Pd	80	mW	---
正向电流(Forward Current)	I_F	30	mA	---
峰值电流(Peak Forward Current*[1])	I_{FP}	100	mA	F=1KHz, 占空比（duty cycle）1/10
逆向电压(Reverse Voltage)	V_R	5	V	---
操作溫度(Operating Temperature)	Topr	-30℃~+80℃	℃	---
贮存溫度(Storage Temperature)	Tstg	-40℃~+100℃	℃	---
焊接溫度(Soldering Temperature)	Tsol	260℃(for 5 seconds)	℃	波峰焊，离胶体 3mm 处 5S-10S

※Condition for I_{FP} is pulse of 1/10 duty and 0.1msec width.

§可靠性实验项目 Reliability Test Project

描述 Description	项目 ITEM	测试标准 Test criterion	测试条件 Test condition	测试时间 Test time	数量 Qty	失效数量 Fail Qty
寿命测试 Life test	常温寿命测试 Life test(room tmperature)	JIS7021:B4	Ta=25℃±5℃,IF=20mA	1000Hrs		0
环境测试 Ambience test	高温存贮 High temperature store	JIS7021:B10 MIL-STD-202:210A MIL-STD-750:2031	Ta=85℃±5℃	1000Hrs		0
	低温存贮 Low temperature store	JIS7021:B12	Ta=-35℃±5℃	1000Hrs		0
	高湿温测试 High temperature/humidity test	JIS7021:B11 MIL-STD-202:103D	Ta=85℃±5℃ RH=85%	1000Hrs		0
	冷热冲击测试 Cold/Heat strike test	JIS7021:B11 MIL-STD-202:17D MIL-STD-750:1026	30min -30℃±5℃⟷ 80℃±5℃ 5min 5min	50Cycles		0
	冷热循环测试 Cold and heat cycle test	JIS7021:A3 MIL-STD-202:107D MIL-STD-705:105E	5min 5min 5min -35℃～25℃～85℃～-35℃ 30min 5min 30min 5min	50Cycles		0

§光电参数 Electrical and optical characteristics(Ta=25℃)

参数 Parameter	符号 Symbol	测试条件 Test condition	最小值 Min.	典型值 Typ.	最大值 Max.	单位 Unit
正向电压 Forward Voltage	V_F	I_F=20mA	1.8	--	2.4	V
发光强度 Luminous Intensity	Iv	I_F=20mA	100	-	500	mcd
反向电流 Reverse Current	Ir	V_R=5V	-	-	5	μA
波长 Peak Wave Length	Nm	I_F=20mA	-	-	-	nm
主波长 Dominant Wave Length	Nm	I_F=20mA	620	-	630	nm
可视角度 Viewing Angle	$2\theta_{1/2}$	I_F=20mA	-	-	-	deg

§典型特性曲线图 Typical photoelectricity characteristic curve chart

Fig.1 Relative intensity vs. Wavelength

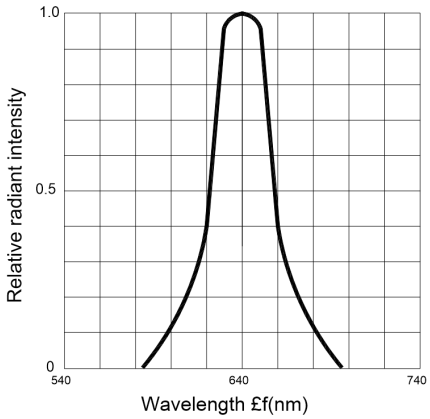

Fig.2 Forward current derating curve vs. Ambient temperature

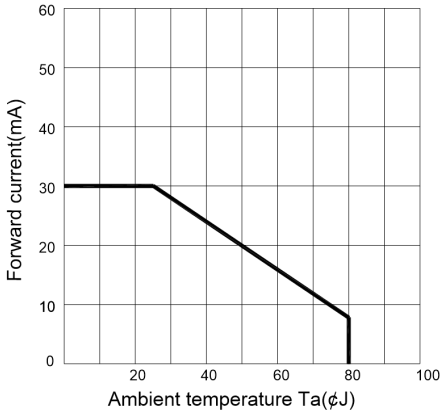

Fig.3 Forward current vs. Forward voltage

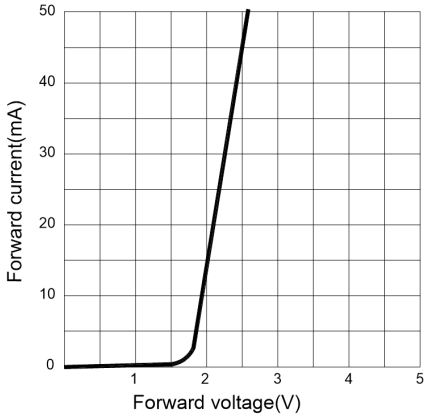

Fig.4 Relative luminous intensity vs. Ambient temperature

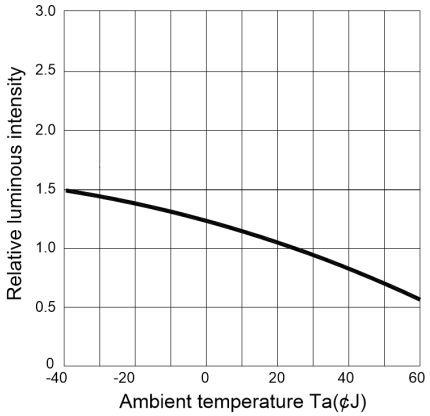

Fig.5 Relative luminous intensity vs. Forward current

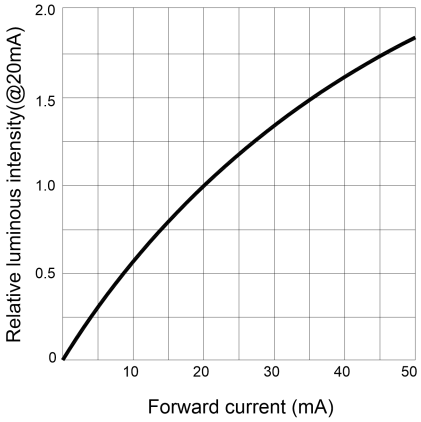

§注意事项 Note

(一)引脚成形方式 (LED bracket forming method)

⑴ 必须离胶体 2 毫米才能折弯支架

The pin of LED can be bent where is at 2mm out of LED colloid .

⑵ 支架成形必须用夹具或由专业人员来完成

Must use fixture to deform the LED btacket.

⑶ 支架成形必须在焊接前完成

Finishing the forming of LED bracket must be before soldering.

⑷ 支架成形需保证引脚的间距与线路板一致

Guarantee the gap between two pin of LED tallys with LED pads in PCB when forming.

(二)烙铁焊接(Manual soldering)

烙铁（最高 30W）尖端温度不能超过 300℃；焊接时间不能超过 3 秒；焊枪位置至少离胶体 3 毫米。

The tip temperature of soldering iron don't exceed 300℃; soldering time don't exceed 3s and soldering position must be 3mm out of LED colloid.

(三)防静电措施(ESD countermeasure)

静电及高压会对 LED 造成损坏，特别是晶片材质为 InGaN 的产品对静电防护要求更衣加严格，要求在使用和检验产品时戴防护静电手碗带或静电手套，焊接工具及设备外壳需可靠接地，焊接条件遵循此份规格书中的条件。

Static electricity and high volt can damage LED,The production whose die material is InGaN must strictly required to prevent ESD, Must put on static glove and static fillet ,soldering tool and the cover of device must connect the ground ,soldering condition follows the related of production specification manual.

(四)过电流保护(Protecting countermeasure when over current)

为避免由于电压的变化引起大电流冲击而造成产品损坏，需要加入保护电阻。

Need add the protecting resistor in circuit in order to avoid damaging LED due to big current and voltage fluctuation.

(五)LED 安装方法(LED installation method)

1）注意各类器件外线的排列以防性能装错，器件不可与发热元件靠得太近，工作条件不要超过其规定的极限。

Pay attention to the LED polarity and avoid installation wrong .LED close to euthermic component work condition should with it's specification.

2）务必不要在引脚间距变形的情况下安装 LED

Don't install the LED undet the condition of the LED pin deformation

3）当装配 LED 进入 PCB 或装配孔时，LED 支架不能承受任何压力

The LED bracket don't load any pressure when installing the LED PCB or fitting hole.

4）在焊接温度回到正常以前，必须避免使 LED 受到任何的震动或外力

Must avoid any strike and force on LED before the soldering temperature return to room temperature return to room temperature.

(六)存储时间(Storage time)

1）在温度 5℃～35℃，湿度 RH60%条件下，产品可保存一年，超过保存期的产品需重新检测后方能使用。

LED can be stored for a year under the condition:the temperature of 5℃～35℃,and humidityOf RH60%,these production must be re －inspected and tested before use if their storage time exceed a year.

2）如果打开的产品在 5℃～35℃，RH60%的空气条件下放置一周，则需要将产品在 65℃±5℃的环境中放置 24 小时以上，并尽量在十五天内使用。

If LED is exposed in air for a week under the condition:the temperature of 5℃～35℃,humidityOf RH60%, must place the LED in the ambience of 65℃±5℃ for 24 hours use it in 15 days for best.

(七)清洗(Cleaning)

当用化学用品清洗胶体时必须特别小心，因为有些化学对胶体表面有损伤并引起退色如三氯乙烯、丙酮等。可用乙醇擦拭、浸渍，时间在常温下不能超过 3 分钟。

Be careful of some chemical results in the LED colloid fades and damage when using chemical the LED, such as Chloroethylene ,acetone etc. can use ethanol to wash or soak LED but the time don't exceed 3 minutes.

（八）弯脚（Kinked）

当 LED 成形弯脚时，弯脚模具容易刮花 LED 脚支架镀层，刮伤处容易生锈，特别是空气湿度大时，为减少生锈机会，建议使用镀锡支架。

The kinked tooling scrape easily the pin of LED , where the LED bracket is rusting easily ,especial it in moist air.To decrease the LED bracket rust ,advise using plated tin LED bracket