MICRO CRYSTAL SWITZERLAND

CM7V-T1A

Tuning Fork Crystal 32.768 kHz



lead-free

RoHS COMPLIANT

DIMENSIONS

Package:

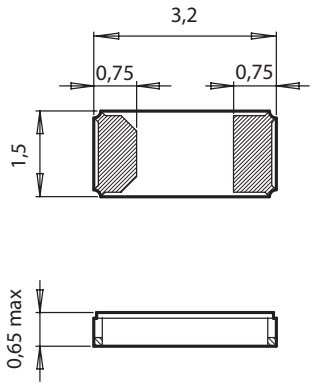

Recommended Solder Pad:

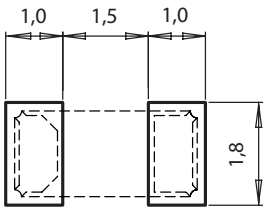

All dimensions in mm typical

APPLICATIONS

IoT
Metering
Industrial
Automotive
Health Care
Wearables, Portables

DESCRIPTION

The CM7V-T1A is a low frequency SMT Quartz Crystal Unit that incorporates a tuning fork Quartz Crystal Resonator. It operates under vacuum in a hermetically sealed ceramic package with metal lid.

FEATURES

Outstanding hermetic sealing with gold-tin preform.
High stability and low aging guaranteed by hermetic sealing.
Available for extended operating temperature range.
Small size, low profile, lightweight (10.3 mg).
High shock and vibration resistant.
100% Pb-free, RoHS-compliant.
Automotive qualification according to AEC-Q200 available.

ELECTRICAL CHARACTERISTICS AT 25°C

Standard Frequencies 32.768 kHz / 100.000 kHz 1)	F_L	**32.768**	**kHz**
Load capacitance 2)	C_L	6.0 / 7.0 / 9.0 / 12.5	pF
Frequency tolerance 3)	$\Delta F/F$	±20	ppm
	$\Delta F/F$	±100	ppm
Series resistance typ./max.	R_S	50 / 70	kΩ
Motional capacitance typ.	C_1	3.7	fF
Static capacitance typ.	C_0	1.2	pF
Drive level max.	P	1.0	µW
Insulation resistance min.	R_i	500	MΩ
Aging first year max.	$\Delta F/F$	±3	ppm
Turnover temperature	T_0	25 ±5	°C
Frequency vs. temperature	$\Delta F/F_0$	$-0.035\ ^{ppm}/_{°C^2}(T - T_0)^2$ ±10%	ppm

1) Other frequencies on request.
2) Other load capacitances on request.
3) Tighter frequency tolerances on request.

STANDARD FREQUENCIES

Frequencies
32.768 kHz / 100.000 kHz
Other frequencies on request

ENVIRONMENTAL CHARACTERISTICS

		Conditions	Max. Dev.
Storage temp. range		–55 to +125°C	
TA Operating temperature range		–40 to +85°C	
TB Extended oper. temp. range		–40 to +125°C	
TC Extended oper. temp. range		–55 to +125°C	
Shock resistance	ΔF/F	5000 g, 0.3 ms, ½ sine	±5 ppm
Vibration resistance	ΔF/F	20 g / 10–2000 Hz	±5 ppm

TERMINATIONS AND PROCESSING

Type	Termination	Processing
CM7V-T1A	For SMT mounting Au flashed pads	IPC/JEDEC J-STD-020C 260°C / 20 - 40 s

ORDERING INFORMATION

C M 7 V - T 1 A 32.768 kHz 12.5 pF ±20 ppm TA QC

Ceramic package

Metal lid

Package size
7 = 3.2 x 1.5 x 0.65 mm

Tuning fork

SMT Package

Au flashed pads

Pads on both ends

Frequency F_L

Load capacitance C_L
6.0 pF
7.0 pF
9.0 pF
12.5 pF
Other C_L on request

Frequency tolerance
±20 ppm
±100 ppm
Tighter freq. tolerances on request

Temperature range
TA = -40 to +85°C (Standard)
TB = -40 to +125°C
TC = -55 to +125°C

Qualification
QC = Commercial Grade (Standard)
QA = Automotive Grade AEC-Q200

A unique part number will be generated for each product specification, i.e:	
20xxxx-MG01	1'000 pcs (in 12 mm tape on 7" reel)
20xxxx-MG03	3'000 pcs (in 12 mm tape on 7" reel)
20xxxx-PG14	14'000 pcs (in 12 mm tape on 13" reel)

All specifications subject to change without notice.

MICRO CRYSTAL SWITZERLAND
A COMPANY OF THE SWATCH GROUP

Micro Crystal AG
Muehlestrasse 14
CH-2540 Grenchen
Switzerland

Phone +41 32 655 82 82
Fax +41 32 655 82 83
sales@microcrystal.com
www.microcrystal.com

Version 8.0/10.2016