GX357

4 PIN SOP PHOTOTRANSISTOR PHOTOCOUPLER
GX357N-G Series

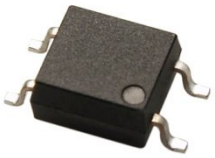

Schematic

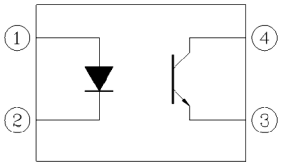

Pin Configuration
1. Anode
2. Cathode
3. Emitter
4. Collector

Features:

- Halogens free
  (Br <900 ppm ,Cl <900 ppm , Br+Cl < 1500 ppm)
- Current transfer ratio
  (CTR: 50~600% at I_F =5mA, V_{CE} =5V)
- High isolation voltage between input and output (Viso=3750 V rms)
- Compact 4 Pin SOP with a 2.0 mm profile
- Compliance with EU REACH
- Pb free and RoHS compliant
- UL and cUL approved (No. E214129)
- VDE approved (No. 132249)
- SEMKO approved
- NEMKO approved
- DEMKO approved
- FIMKO approved

Description

The GX357N-G series contains an infrared emitting diode, optically coupled to a phototransistor detector.

The devices in a 4-pin small outline SMD package.

Applications

- DC-DC Converters
- Programmable controllers
- Telecommunication equipments
- Signal transmission between circuits of different potentials and impedances

GX357

Absolute Maximum Ratings (Ta=25℃)

	Parameter	Symbol	Rating	Unit
Input	Forward current	I_F	50	mA
	Peak forward current (1us, pulse)	I_{FP}	1	A
	Reverse voltage	V_R	6	V
	Power dissipation	P_D	70	mW
	Derating factor (about Ta=100°C)		2.9	mW/C
Output	Power dissipation	P_C	150	mW
	Derating factor (above T_a = 70°C)		3.7	mW/°C
	Collector current	I_C	50	mA
	Collector-Emitter voltage	V_{CEO}	80	V
	Emitter-Collector voltage	V_{ECO}	7	V
Total Power Dissipation		P_{TOT}	200	mW
Isolation Voltage*1		V_{ISO}	3750	V rms
Operating temperature		T_{OPR}	-55 ~ +110	°C
Storage temperature		T_{STG}	-55 ~ +125	°C
Soldering Temperature*2		T_{SOL}	260	°C

Notes:

*1 AC for 1 minute, R.H.= 40 ~ 60% R.H. In this test, pins 1, 2 are shorted together, and pins 3, 4 are shorted together.

*2 For 10 seconds

GX357

Electro-Optical Characteristics (Ta=25℃ unless specified otherwise)

Input

Parameter	Symbol	Min.	Typ.	Max.	Unit	Condition
Forward voltage	V_F	-	1.2	1.4	V	I_F = 20mA
Reverse current	I_R	-	-	10	μA	V_R = 4V
Input capacitance	C_{in}	-	30	250	pF	V = 0, f = 1kHz

Output

Parameter	Symbol	Min	Typ.	Max.	Unit	Condition
Collector-Emitter dark current	I_{CEO}	-	-	100	nA	V_{CE} = 20V, I_F = 0mA
Collector-Emitter breakdown voltage	BV_{CEO}	80	-	-	V	I_C = 0.1mA
Emitter-Collector breakdown voltage	BV_{ECO}	7	-	-	V	I_E = 0.01mA

Transfer Characteristics (T_a=25°C unless specified otherwise)

Parameter		Symbol	Min	Typ.	Max.	Unit	Condition
Current Transfer ratio	GX357N	CTR	50	-	600	%	I_F = 5mA ,V_{CE} = 5V
	GX357NA		80	-	160		
	GX357NB		130	-	260		
	GX357NC		200	-	400		
	GX357ND		300	-	600		
	GX357NE		100	-	200		
	GX357NF		150	-	300		
Collector-Emitter saturation voltage		$V_{CE(sat)}$	-	0.1	0.2	V	I_F = 20mA ,I_C = 1mA
Isolation resistance		R_{IO}	5×10^{10}	-	-	Ω	V_{IO} = 500Vdc, 40~60% R.H.
Floating capacitance		C_{IO}	-	0.6	1.0	pF	V_{IO} = 0, f = 1MHz
Rise time		t_r	-	3	18	μs	V_{CE} = 2V, I_C = 2mA, R_L = 100Ω
Fall time		t_f	-	4	18		

* Typical values at T_a = 25°C

GX357

Typical Electro-Optical Characteristics Curves

Figure 1. Forward Current vs Forward Voltage

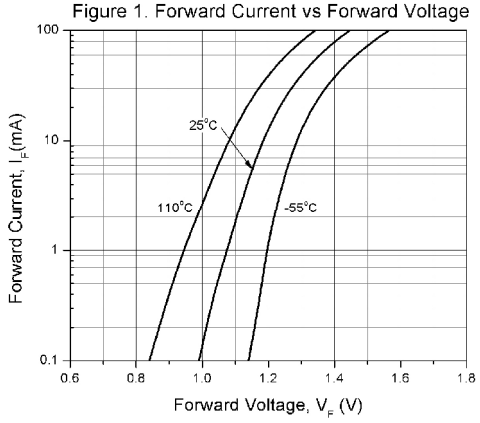

Figure 2. Normalized Collector Current vs Forward Current

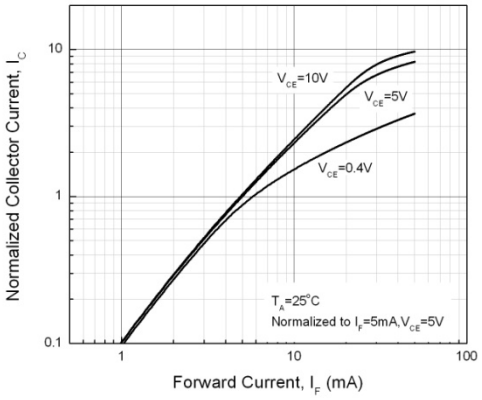

Figure 3. Normalized Current Transfer Ratio vs Forward Current

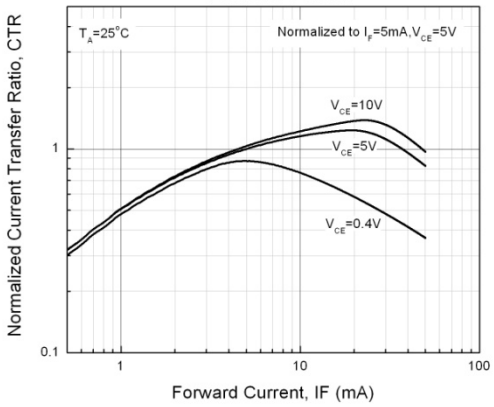

Figure 4. Normalized Collector Current vs Ambient Temperature

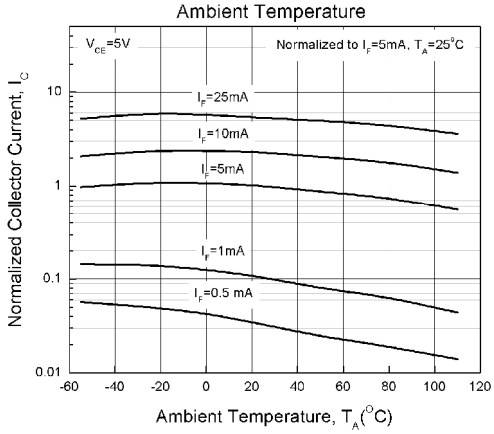

Figure 5. Collector Current vs Collector-Emitter Voltage

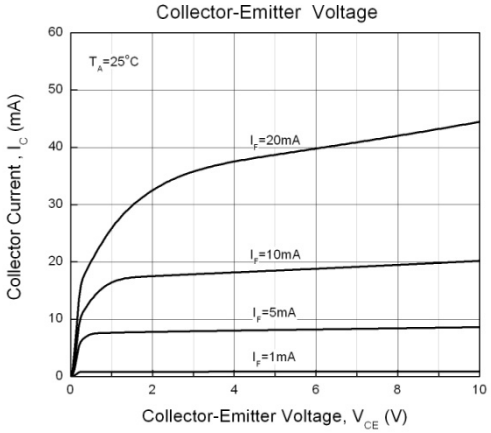

Figure 6. Collector Current vs Collector-Emitter Voltage

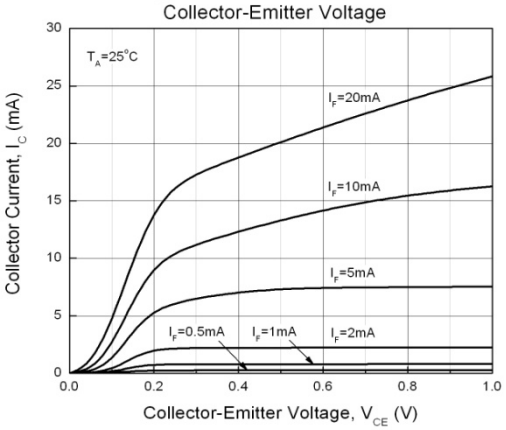

Figure 7. Collector Dark Current vs Ambient Temperature

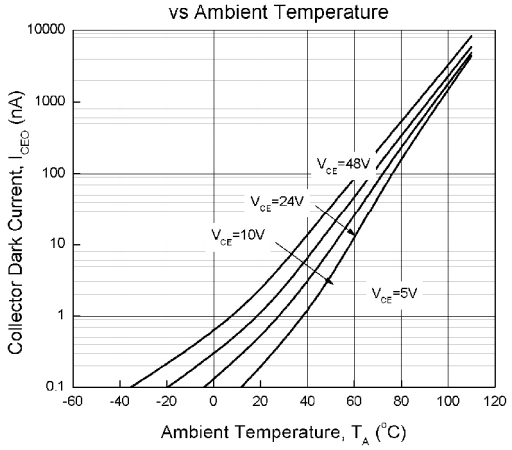

Figure 8. Switching Time vs Load Resistance

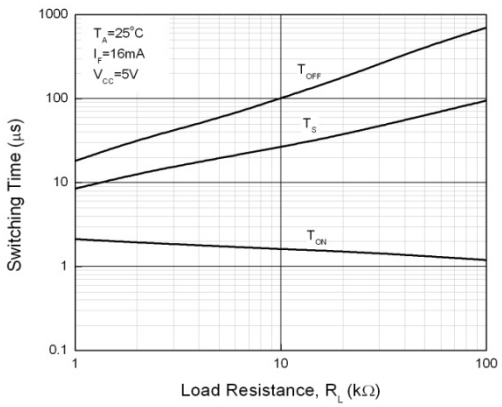

Figure 9. Collector-Emitter Saturation Voltage vs Ambient Temperature

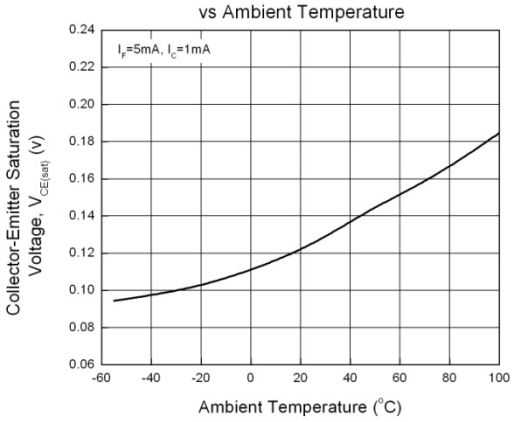

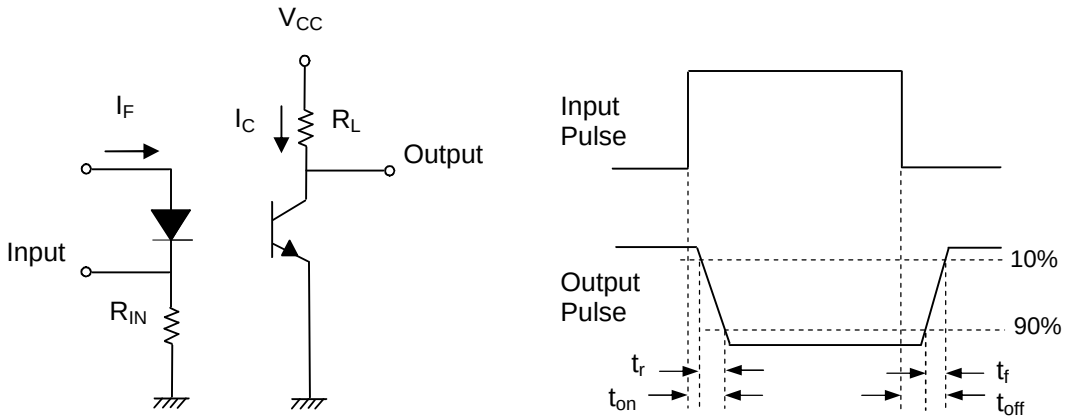

Figure 10. Switching Time Test Circuit & Waveforms

Order Information

Part Number

GX357N(X)(Y)-VG

Note

X = CTR Rank (A, B, C, D, E, For none)
Y = Tape and reel option (TA, TB or none).
V = VDE (option)
G = Halogen free

Option	Description	Packing quantity
None	Standard SMD option	100 units per tube
-V	Standard SMD option + VDE	100 units per tube
(TA)	TA Tape & reel option	3000 units per reel
(TB)	TB Tape & reel option	3000 units per reel
(TA)-V	TA Tape & reel option + VDE	3000 units per reel
(TB)-V	TB Tape & reel option + VDE	3000 units per reel

Package Dimension (Dimensions in mm)

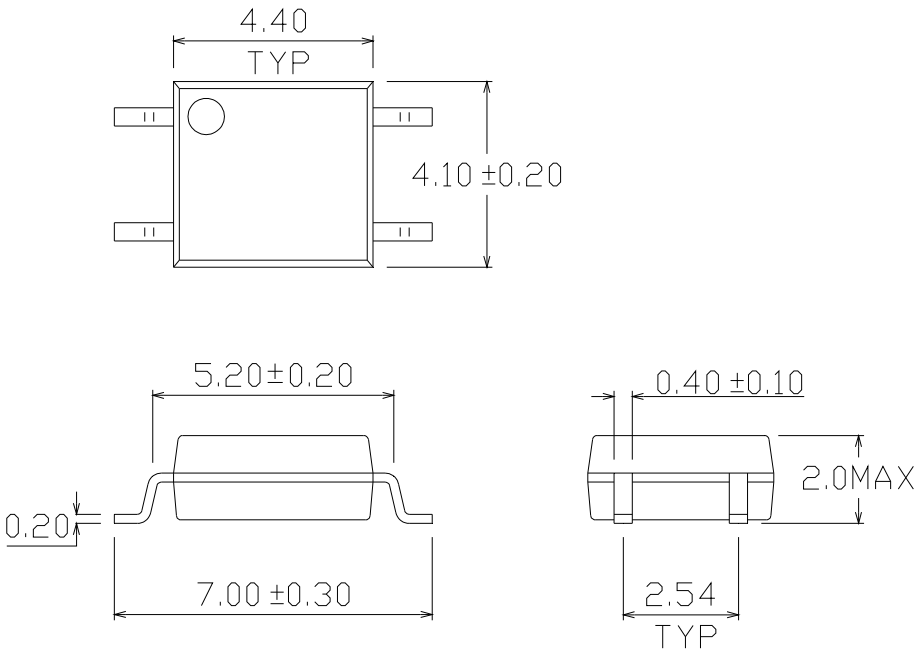

Recommended pad layout for surface mount leadform

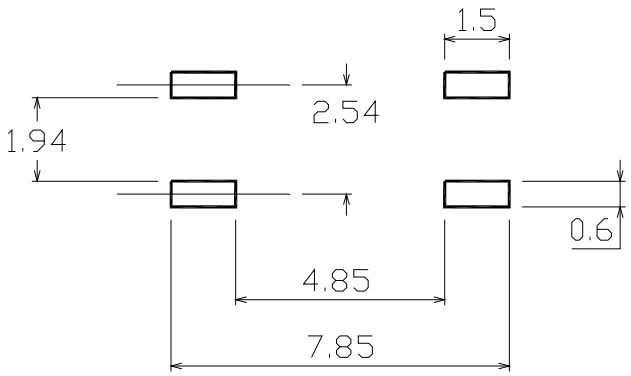

Device Marking

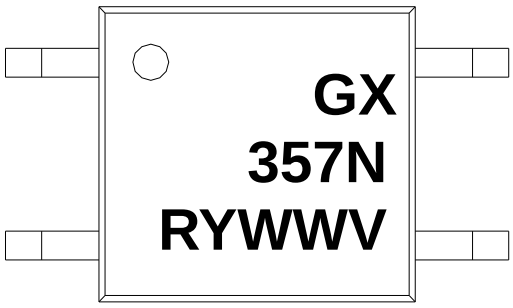

Notes

GX	denotes GuoXinjiapin
357N	denotes Device Number
R	denotes CTR Rank
Y	denotes 1 digit Year code
WW	denotes 2 digit Week code
V	denotes VDE approved (optional)

GX357

Tape & Reel Packing Specifications

Option TA

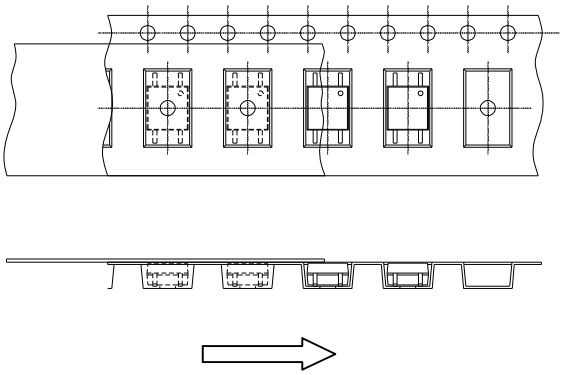

Direction of feed from reel

Option TB

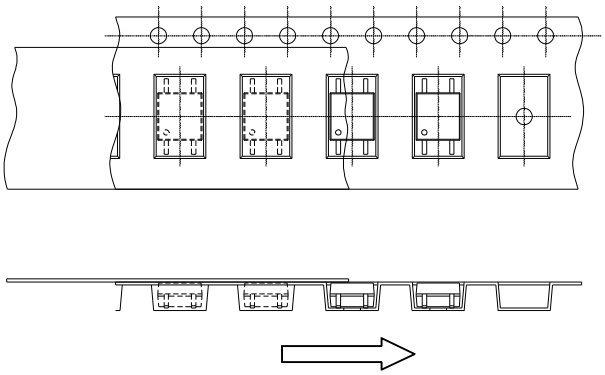

Direction of feed from reel

Tape dimensions

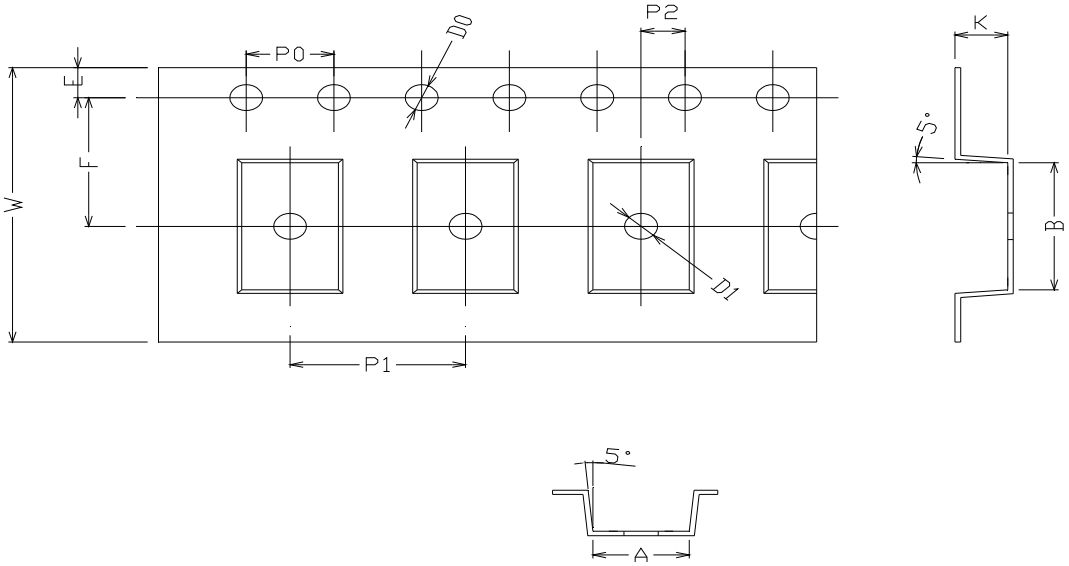

Dimension No.	A	B	Do	D1	E	F
Dimension (mm)	4.4 ± 0.1	7.4 ± 0.1	1.5 + 0.1/-0	1.5 ± 0.1	1.75± 0.1	7.5 ± 0.05
Dimension No.	**Po**	**P1**	**P2**	**t**	**W**	**K**
Dimension (mm)	4.0 ± 0.15	8.0 ± 0.1	2.0 ± 0.1	0.25 ± 0.03	16.0 ± 0.2	2.4± 0.1

GX357

Precautions for Use

1. Soldering Condition

1.1 (A) Maximum Body Case Temperature Profile for evaluation of Reflow Profile

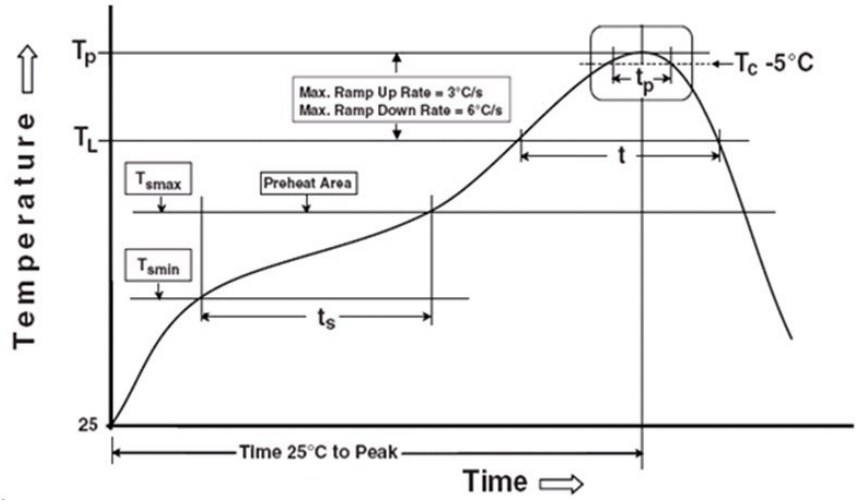

Note:	Reference: IPC/JEDEC J-STD-020D
Preheat	
Temperature min (T_{smin})	150 °C
Temperature max (T_{smax})	200°C
Time (T_{smin} to T_{smax}) (t_s)	60-120 seconds
Average ramp-up rate (T_{smax} to T_p)	3 °C/second max
Other	
Liquidus Temperature (T_L)	217 °C
Time above Liquidus Temperature (t_L)	60-100 sec
Peak Temperature (T_P)	260°C
Time within 5 °C of Actual Peak Temperature: T_P - 5°C	30 s
Ramp- Down Rate from Peak Temperature	6°C /second max.
Time 25°C to peak temperature	8 minutes max.
Reflow times	3 times

.

GX357

DISCLAIMER

1. Above specification may be changed without notice. GX will reserve authority on material change for above specification.
2. When using this product, please observe the absolute maximum ratings and the instructions for using outlined in these specification sheets. GX assumes no responsibility for any damage resulting from use of the product which does not comply with the absolute maximum ratings and the instructions included in these specification sheets.
3. These specification sheets include materials protected under copyright of GX corporation. Please don't reproduce or cause anyone to reproduce them without GX's consent.