具有三态输出的 SNx4HC125 四路缓冲器

1 特性

- 缓冲输入
- 宽工作电压范围：2V 至 6V
- 宽工作温度范围：
  – 40°C 至 +85°C
- 支持多达 10 个 LSTTL 负载的扇出
- 与 LSTTL 逻辑 IC 相比，可显著降低功耗

2 应用

- 使能数字信号

3 说明

此器件包含四个具有三态输出的独立缓冲器。每个逻辑门以正逻辑执行布尔函数 Y = A。

器件信息(1)

器件型号	封装	封装尺寸（标称值）
SN74HC125D	SOIC (14)	8.70mm × 3.90mm
SN74HC125DB	SSOP (14)	6.50mm × 5.30mm
SN74HC125N	PDIP (14)	19.30mm × 6.40mm
SN74HC125NS	SO (14)	10.20mm × 5.30mm
SN74HC125PW	TSSOP (14)	5.00mm × 4.40mm
SN54HC125J	CDIP (14)	21.30mm × 7.60mm
SN54HC125FK	LCCC (20)	8.90mm × 8.90mm

(1) 如需了解所有可用封装，请参阅数据表末尾的可订购产品附录。

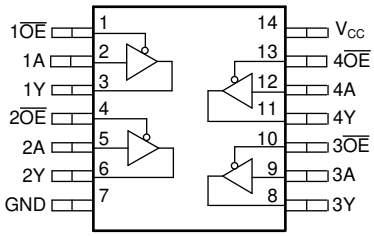

功能引脚分配

本文档旨在为方便起见，提供有关 TI 产品中文版本的信息，以确认产品的概要。有关适用的官方英文版本的最新信息，请访问 www.ti.com，其内容始终优先。TI 不保证翻译的准确性和有效性。在实际设计之前，请务必参考最新版本的英文版本。

Table of Contents

1 特性 1
2 应用 1
3 说明 1
4 Revision History 2
5 Pin Configuration and Functions 3
Pin Functions 3
6 Specifications 4
6.1 Absolute Maximum Ratings 4
6.2 ESD Ratings 4
6.3 Recommended Operating Conditions 4
6.4 Thermal Information 5
6.5 Electrical Characteristics - 74 5
6.6 Electrical Characteristics - 54 6
6.7 Switching Characteristics - 74 6
6.8 Switching Characteristics - 54 7
6.9 Operating Characteristics 7
6.10 Typical Characteristics 7
7 Parameter Measurement Information 9
8 Detailed Description 10
8.1 Overview 10
8.2 Functional Block Diagram 10
8.3 Feature Description 10
8.4 Device Functional Modes 11
9 Application and Implementation 12
9.1 Application Information 12
9.2 Typical Application 12
10 Power Supply Recommendations 14
11 Layout 14
11.1 Layout Guidelines 14
11.2 Layout Example 14
12 Device and Documentation Support 15
12.1 Documentation Support 15
12.2 Related Links 15
12.3 支持资源 15
12.4 Trademarks 15
12.5 静电放电警告 15
12.6 术语表 15
13 Mechanical, Packaging, and Orderable Information 15

4 Revision History

注：以前版本的页码可能与当前版本的页码不同

Changes from Revision E (December 2015) to Revision F (April 2021)	Page
• 更新了整个文档的表、图和交叉参考的编号格式	1
• 更新至全新的数据表标准	1
• Increased D (86 to 133.6), DB (96 to 108.0), NS (76 to 122.6), and PW (113 to 151.7); decreased N (80 to 63.0) °C/W	5

Copyright © 2023 Texas Instruments Incorporated

5 Pin Configuration and Functions

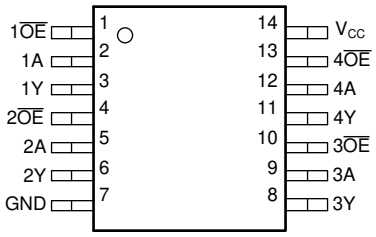

图 5-1. D, DB, N, NS, PW, or J Package
14-Pin SOIC, SSOP, PDIP, SO, TSSOP, or CDIP
Top View

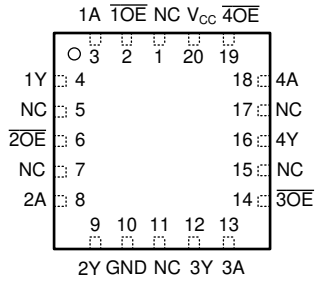

图 5-2. FK Package
20-Pin LCCC
Top View

Pin Functions

PIN			I/O	DESCRIPTION
NAME	D, DB, N, NS, PW, or J	FK		
1 $\overline{OE}$	1	2	Input	Channel 1, Output Enable, Active Low
1A	2	3	Input	Channel 1, Input A
1Y	3	4	Output	Channel 1, Output Y
2 $\overline{OE}$	4	6	Input	Channel 2, Output Enable, Active Low
2A	5	8	Input	Channel 2, Input A
2Y	6	9	Output	Channel 2, Output Y
GND	7	10	—	Ground
3Y	8	12	Output	Channel 3, Output Y
3A	9	13	Input	Channel 3, Input A
3 $\overline{OE}$	10	14	Input	Channel 3, Output Enable, Active Low
4Y	11	16	Output	Channel 4, Output Y
4A	12	18	Input	Channel 4, Input A
4 $\overline{OE}$	13	19	Input	Channel 4, Output Enable, Active Low
V_{CC}	14	20	—	Positive Supply
NC		1, 5, 7, 11, 15, 17	—	Not internally connected

Copyright © 2023 Texas Instruments Incorporated

6 Specifications

6.1 Absolute Maximum Ratings

over operating free-air temperature range (unless otherwise noted)(1)

			MIN	MAX	UNIT
V_{CC}	Supply voltage		–0.5	7	V
I_{IK}	Input clamp current(2)	$V_I < 0$ or $V_I > V_{CC}$		±20	mA
I_{OK}	Output clamp current(2)	$V_O < 0$ or $V_O > V_{CC}$		±20	mA
I_O	Continuous output current	$V_O = 0$ to V_{CC}		±35	mA
	Continuous current through V_{CC} or GND			±70	mA
T_J	Junction temperature(3)			150	°C
T_{stg}	Storage temperature		–65	150	°C

(1) Stresses beyond those listed under *Absolute Maximum Rating* may cause permanent damage to the device. These are stress ratings only, which do not imply functional operation of the device at these or any other conditions beyond those indicated under *Recommended Operating Condition*. Exposure to absolute-maximum-rated conditions for extended periods may affect device reliability.
(2) The input and output voltage ratings may be exceeded if the input and output current ratings are observed.
(3) Guaranteed by design.

6.2 ESD Ratings

			VALUE	UNIT
$V_{(ESD)}$	Electrostatic discharge	Human-body model (HBM), per ANSI/ESDA/JEDEC JS-001(1)	±2000	V
		Charged-device model (CDM), per JEDEC specification JESD22-C101(2)	±500	

(1) JEDEC document JEP155 states that 500-V HBM allows safe manufacturing with a standard ESD control process.
(2) JEDEC document JEP157 states that 250-V CDM allows safe manufacturing with a standard ESD control process.

6.3 Recommended Operating Conditions

over operating free-air temperature range (unless otherwise noted)

			MIN	NOM	MAX	UNIT
V_{CC}	Supply voltage		2	5	6	V
V_{IH}	High-level input voltage	V_{CC} = 2 V	1.5			V
		V_{CC} = 4.5 V	3.15			
		V_{CC} = 6 V	4.2			
V_{IL}	Low-level input voltage	V_{CC} = 2 V			0.5	V
		V_{CC} = 4.5 V			1.35	
		V_{CC} = 6 V			1.8	
V_I	Input voltage		0		V_{CC}	V
V_O	Output voltage		0		V_{CC}	V
t_t	Input transition time	V_{CC} = 2 V			1000	ns
		V_{CC} = 4.5 V			500	
		V_{CC} = 6 V			400	
T_A	Operating free-air temperature		–55		125	°C

Copyright © 2023 Texas Instruments Incorporated

6.4 Thermal Information

THERMAL METRIC[1]		SN74HC125					UNIT
		D (SOIC)	DB (SSOP)	N (PDIP)	NS (SO)	PW (TSSOP)	
		14 PINS	14 PINS	14 PINS	14 PINS	14 PINS	
$R_{\theta JA}$	Junction-to-ambient thermal resistance	133.6	108.0	63.0	122.6	151.7	°C/W
$R_{\theta JC(top)}$	Junction-to-case (top) thermal resistance	89	57.8	50.7	81.8	79.4	°C/W
$R_{\theta JB}$	Junction-to-board thermal resistance	89.5	58.3	42.7	83.8	94.7	°C/W
Ψ_{JT}	Junction-to-top characterization parameter	45.5	18.0	30.3	45.4	25.2	°C/W
Ψ_{JB}	Junction-to-board characterization parameter	89.1	57.6	42.5	83.4	94.1	°C/W
$R_{\theta JC(bot)}$	Junction-to-case (bottom) thermal resistance	N/A	N/A	N/A	N/A	N/A	°C/W

(1) For more information about traditional and new thermal metrics, see the Semiconductor and IC Package Thermal Metrics application report.

6.5 Electrical Characteristics - 74

over operating free-air temperature range; typical values measured at T_A = 25°C (unless otherwise noted).

PARAMETER		TEST CONDITIONS		V_{CC}	Operating free-air temperature (T_A)						UNIT
					25°C			-40°C to 85°C			
					MIN	TYP	MAX	MIN	TYP	MAX	
V_{OH}	High-level output voltage	V_I = V_{IH} or V_{IL}	I_{OH} = – 20 µA	2 V	1.9	1.998		1.9			V
				4.5 V	4.4	4.499		4.4			
				6 V	5.9	5.999		5.9			
			I_{OH} = – 6 mA	4.5 V	3.98	4.3		3.84			
			I_{OH} = – 7.8 mA	6 V	5.48	5.8		5.34			
V_{OL}	Low-level output voltage	V_I = V_{IH} or V_{IL}	I_{OL} = 20 µA	2 V		0.002	0.1			0.1	V
				4.5 V		0.001	0.1			0.1	
				6 V		0.001	0.1			0.1	
			I_{OL} = 6 mA	4.5 V		0.17	0.26			0.33	
			I_{OL} = 7.8 mA	6 V		0.15	0.26			0.33	
I_I	Input leakage current	V_I = V_{CC} or 0		6 V			±0.1			±1	µA
I_{OZ}	Three-state leakage current	V_O = V_{CC} or 0		6 V		±0.01	±0.5			±5	µA
I_{CC}	Supply current	V_I = V_{CC} or 0	I_O = 0	6 V			8			80	µA
C_i	Input capacitance			2 V to 6 V		3	10			10	pF

Copyright © 2023 Texas Instruments Incorporated

6.6 Electrical Characteristics - 54

over operating free-air temperature range; typical values measured at TA = 25°C (unless otherwise noted).

PARAMETER		TEST CONDITIONS		V_{CC}	Operating free-air temperature (T_A)									UNIT
					25°C			– 40°C to 85°C			– 55°C to 125°C			
					MIN	TYP	MAX	MIN	TYP	MAX	MIN	TYP	MAX	
V_{OH}	High-level output voltage	$V_I = V_{IH}$ or V_{IL}	I_{OH} = – 20 μA	2 V	1.9	1.998		1.9			1.9			V
				4.5 V	4.4	4.499		4.4			4.4			
				6 V	5.9	5.999		5.9			5.9			
			I_{OH} = – 6 mA	4.5 V	3.98	4.3		3.84			3.7			
			I_{OH} = – 7.8 mA	6 V	5.48	5.8		5.34			5.2			
V_{OL}	Low-level output voltage	$V_I = V_{IH}$ or V_{IL}	I_{OL} = 20 μA	2 V		0.002	0.1			0.1			0.1	V
				4.5 V		0.001	0.1			0.1			0.1	
				6 V		0.001	0.1			0.1			0.1	
			I_{OL} = 6 mA	4.5 V		0.17	0.26			0.33			0.4	
			I_{OL} = 7.8 mA	6 V		0.15	0.26			0.33			0.4	
I_I	Input leakage current	$V_I = V_{CC}$ or 0		6 V			±0.1			±1			±1	μA
I_{OZ}	Three-state leakage current	$V_O = V_{CC}$ or 0		6 V		±0.01	±0.5			±5			±10	μA
I_{CC}	Supply current	$V_I = V_{CC}$ or 0	I_O = 0	6 V			8			80			160	μA
C_i	Input capacitance			2 V to 6 V		3	10			10			10	pF

6.7 Switching Characteristics - 74

over operating free-air temperature range (unless otherwise noted)

PARAMETER		FROM	TO	TEST CONDITIONS	V_{CC}	Operating free-air temperature (T_A)						UNIT
						25°C			– 40°C to 85°C			
						MIN	TYP	MAX	MIN	TYP	MAX	
t_{pd}	Propagation delay	A	Y	C_L = 50 pF	2 V		47	120			180	ns
					4.5 V		14	24			36	
					6 V		11	20			31	
				C_L = 150 pF	2 V		67	150			225	ns
					4.5 V		19	30			45	
					6 V		15	25			39	
t_{en}	Enable delay	$\overline{OE}$	Y	C_L = 50 pF	2 V		57	120			180	ns
					4.5 V		16	24			36	
					6 V		12	20			31	
				C_L = 150 pF	2 V		100	135			202	ns
					4.5 V		20	27			40	
					6 V		17	23			36	
t_{dis}	Disable delay	$\overline{OE}$	Y	C_L = 50 pF	2 V		35	120			180	ns
					4.5 V		17	24			36	
					6 V		15	20			31	

Copyright © 2023 Texas Instruments Incorporated

over operating free-air temperature range (unless otherwise noted)

PARAMETER		FROM	TO	TEST CONDITIONS	V_{CC}	Operating free-air temperature (T_A)						UNIT
						25°C			– 40°C to 85°C			
						MIN	TYP	MAX	MIN	TYP	MAX	
t_t	Transition-time		Y	C_L = 50 pF	2 V		28	60			90	ns
					4.5 V		8	12			18	
					6 V		6	10			15	
				C_L = 150 pF	2 V		45	210			315	ns
					4.5 V		17	42			63	
					6 V		13	36			53	

6.8 Switching Characteristics - 54

over operating free-air temperature range; typical values measured at TA = 25°C (unless otherwise noted).

PARAMETER		FROM	TO	TEST CONDITIONS	V_{CC}	Operating free-air temperature (T_A)									UNIT
						25°C			– 40°C to 85°C			– 55°C to 125°C			
						MIN	TYP	MAX	MIN	TYP	MAX	MIN	TYP	MAX	
t_{pd}	Propagation delay	A	Y	C_L = 50 pF	2 V		47	120			180			150	ns
					4.5 V		14	24			36			30	
					6 V		11	20			31			26	
				C_L = 150 pF	2 V		67	150			225			188	ns
					4.5 V		19	30			45			38	
					6 V		15	25			39			33	
t_{en}	Enable delay	OE	Y	C_L = 50 pF	2 V		57	120			180			150	ns
					4.5 V		16	24			36			30	
					6 V		12	20			31			26	
				C_L = 150 pF	2 V		100	135			202			169	ns
					4.5 V		20	27			40			36	
					6 V		17	23			36			30	
t_{dis}	Disable delay	OE	Y	C_L = 50 pF	2 V		35	120			180			150	ns
					4.5 V		17	24			36			30	
					6 V		15	20			31			26	
t_t	Transition-time		Y	C_L = 50 pF	2 V		28	60			90			75	ns
					4.5 V		8	12			18			15	
					6 V		6	10			15			13	
				C_L = 150 pF	2 V		45	210			315			265	ns
					4.5 V		17	42			63			53	
					6 V		13	36			53			45	

6.9 Operating Characteristics

over operating free-air temperature range; typical values measured at T_A = 25°C (unless otherwise noted).

PARAMETER		TEST CONDITIONS	V_{CC}	MIN	TYP	MAX	UNIT
C_{pd}	Power dissipation capacitance per gate	No load	2 V to 6 V		45		pF

6.10 Typical Characteristics

T_A = 25°C

Copyright © 2023 Texas Instruments Incorporated

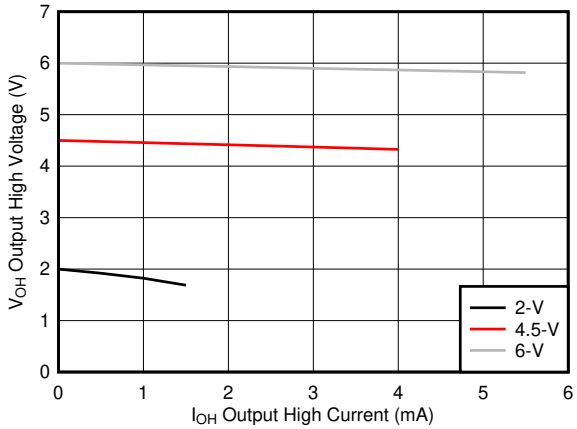

图 6-1. Typical output voltage in the high state (V_{OH})

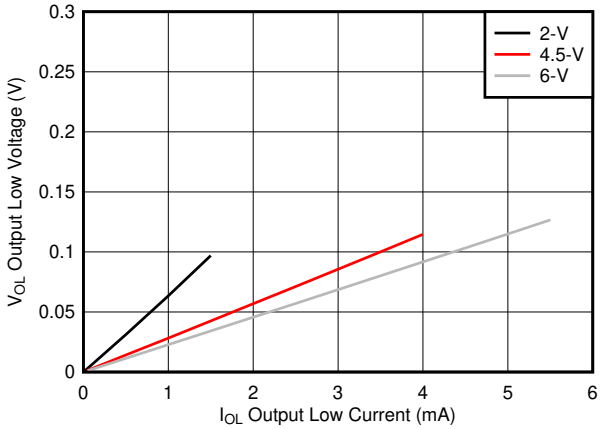

图 6-2. Typical output voltage in the low state (V_{OL})

Copyright © 2023 Texas Instruments Incorporated

7 Parameter Measurement Information

- Phase relationships between waveforms were chosen arbitrarily. All input pulses are supplied by generators having the following characteristics: PRR ≤ 1 MHz, Z_O = 50 Ω, t_t < 6 ns.
- The outputs are measured one at a time, with one input transition per measurement.

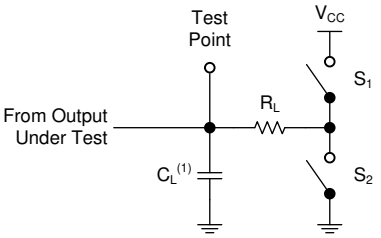

A. C_L = 50 pF and includes probe and jig capacitance.

图 7-1. Load Circuit

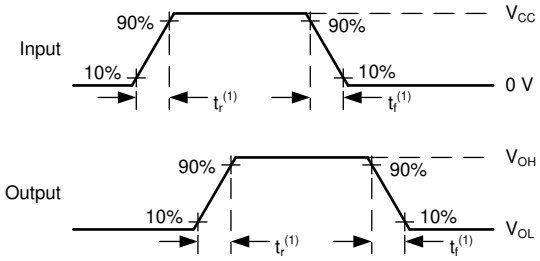

A. t_t is the greater of t_r and t_f.

图 7-2. Voltage Waveforms Transition Times

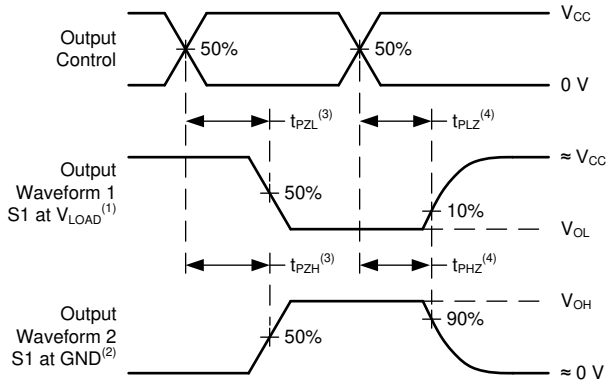

A. The maximum between t_{PLH} and t_{PHL} is used for t_{pd}.

图 7-3. Voltage Waveforms Propagation Delays

Copyright © 2023 Texas Instruments Incorporated

8 Detailed Description

8.1 Overview

This device contains four independent buffers with 3-state outputs. Each gate performs the Boolean function Y = A in positive logic.

8.2 Functional Block Diagram

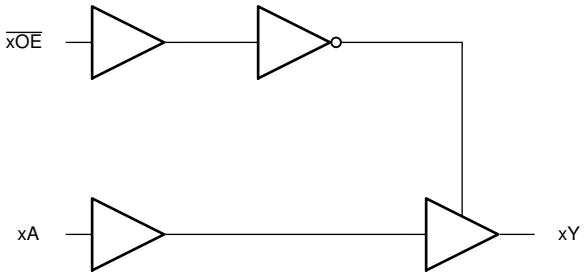

8.3 Feature Description

8.3.1 Balanced CMOS 3-State Outputs

A balanced output allows the device to sink and source similar currents. The drive capability of this device may create fast edges into light loads so routing and load conditions should be considered to prevent ringing. Additionally, the outputs of this device are capable of driving larger currents than the device can sustain without being damaged. It is important for the output power of the device to be limited to avoid damage due to over-current. The electrical and thermal limits defined in the *Absolute Maximum Ratings* must be followed at all times.

The SN74HC125 can drive a load with a total capacitance less than or equal to the maximum load listed in the *Electrical Characteristics - 74* connected to a high-impedance CMOS input while still meeting all of the datasheet specifications. Larger capacitive loads can be applied, however it is not recommended to exceed the provided load value. If larger capacitive loads are required, it is recommended to add a series resistor between the output and the capacitor to limit output current to the values given in the *Absolute Maximum Ratings*.

3-State outputs can be placed into a high-impedance state. In this state, the output will neither source nor sink current, and leakage current is defined by the I_{OZ} specification in the *Electrical Characteristics - 74*. A pull-up or pull-down resistor can be used to ensure that the output remains HIGH or LOW, respectively, during the high-impedance state.

8.3.2 Standard CMOS Inputs

Standard CMOS inputs are high impedance and are typically modeled as a resistor from the input to ground in parallel with the input capacitance given in the *Electrical Characteristics - 74*. The worst case resistance is calculated with the maximum input voltage, given in the *Absolute Maximum Ratings*, and the maximum input leakage current, given in the *Electrical Characteristics - 74*, using ohm's law (R = V ÷ I).

Signals applied to the inputs need to have fast edge rates, as defined by the input transition time in the *Recommended Operating Conditions* to avoid excessive current consumption and oscillations. If a slow or noisy input signal is required, a device with a Schmitt-trigger input should be used to condition the input signal prior to the standard CMOS input.

Copyright © 2023 Texas Instruments Incorporated

8.3.3 Clamp Diode Structure

The inputs and outputs to this device have both positive and negative clamping diodes as depicted in 图 8-1.

CAUTION

Voltages beyond the values specified in the *节 6.1* table can cause damage to the device. The recommended input and output voltage ratings may be exceeded if the input and output clamp-current ratings are observed.

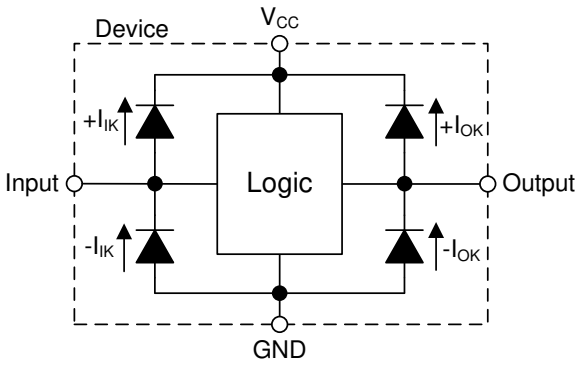

图 8-1. Electrical Placement of Clamping Diodes for Each Input and Output

8.4 Device Functional Modes

表 8-1. Function Table

INPUTS		OUTPUT
$\overline{OE}$	A	Y
L	H	H
L	L	L
H	X	Z

9 Application and Implementation

备注

以下应用部分中的信息不属于 TI 器件规格的范围，TI 不担保其准确性和完整性。TI 的客 户应负责确定器件是否适用于其应用。客户应验证并测试其设计，以确保系统功能。

9.1 Application Information

In this application, a 3-state buffer is used to enable or disable a data connection as shown in *图 9-1*. It is common to see all four channels of a device used together for controlling a 4-bit data bus, however each channel of the device can be used independently. Unused channels should have the inputs terminated at ground or V_{CC} and the output left unconnected.

When the output of the device is active, the data signal will be replicated at the output. When the output of the device is disabled, the output will be in a high-impedance state, and the output voltage will be determined by the circuit connected to the output pin. This circuit is most commonly used when a bus must be completely disabled. One example of this situation is when the circuitry connected to the output is to be powered off for an extended period of time to save system power, and the inputs to that circuitry cannot have a voltage present due to protective clamp diodes.

9.2 Typical Application

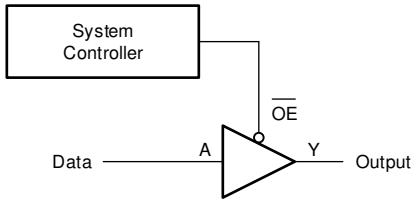

图 9-1. Typical application schematic

9.2.1 Design Requirements

9.2.1.1 Power Considerations

Ensure the desired supply voltage is within the range specified in the *Recommended Operating Conditions*. The supply voltage sets the device's electrical characteristics as described in the *Electrical Characteristics - 74*.

The supply must be capable of sourcing current equal to the total current to be sourced by all outputs of the SN74HC125 plus the maximum supply current, I_{CC}, listed in the *Electrical Characteristics - 74*. The logic device can only source or sink as much current as it is provided at the supply and ground pins, respectively. Be sure not to exceed the maximum total current through GND or V_{CC} listed in the *Absolute Maximum Ratings*.

Total power consumption can be calculated using the information provided in CMOS Power Consumption and C_{pd} Calculation.

Thermal increase can be calculated using the information provided in Thermal Characteristics of Standard Linear and Logic (SLL) Packages and Devices.

CAUTION

The maximum junction temperature, T_J(max) listed in the *Absolute Maximum Ratings*, is an *additional limitation* to prevent damage to the device. Do not violate any values listed in the *Absolute Maximum Ratings*. These limits are provided to prevent damage to the device.

9.2.1.2 Input Considerations

Unused inputs must be terminated to either V_{CC} or ground. These can be directly terminated if the input is completely unused, or they can be connected with a pull-up or pull-down resistor if the input is to be used

Copyright © 2023 Texas Instruments Incorporated

sometimes, but not always. A pull-up resistor is used for a default state of HIGH, and a pull-down resistor is used for a default state of LOW. The resistor size is limited by drive current of the controller, leakage current into the SN74HC125, as specified in the *Electrical Characteristics - 74*, and the desired input transition rate. A 10-kΩ resistor value is often used due to these factors.

The SN74HC125 has standard CMOS inputs, so input signal edge rates cannot be slow. Slow input edge rates can cause oscillations and damaging shoot-through current. The recommended rates are defined in the *Recommended Operating Conditions*.

Refer to 节 *8.3* for additional information regarding the inputs for this device.

9.2.1.3 Output Considerations

The positive supply voltage is used to produce the output HIGH voltage. Drawing current from the output will decrease the output voltage as specified by the V_{OH} specification in the *Electrical Characteristics - 74*. Similarly, the ground voltage is used to produce the output LOW voltage. Sinking current into the output will increase the output voltage as specified by the V_{OL} specification in the *Electrical Characteristics - 74*.

Unused outputs can be left floating. Do not connect outputs directly to V_{CC} or ground.

Refer to 节 *8.3* for additional information regarding the outputs for this device.

9.2.2 Detailed Design Procedure

1. Add a decoupling capacitor from V_{CC} to GND. The capacitor needs to be placed physically close to the device and electrically close to both the V_{CC} and GND pins. An example layout is shown in 节 *11*.
2. Ensure the capacitive load at the output is ≤ 70 pF. This is not a hard limit, however it will ensure optimal performance. This can be accomplished by providing short, appropriately sized traces from the SN74HC125 to the receiving device.
3. Ensure the resistive load at the output is larger than (V_{CC} / I_O(max)) Ω. This will ensure that the maximum output current from the *Absolute Maximum Ratings* is not violated. Most CMOS inputs have a resistive load measured in megaohms; much larger than the minimum calculated above.
4. Thermal issues are rarely a concern for logic gates, however the power consumption and thermal increase can be calculated using the steps provided in the application report, CMOS Power Consumption and Cpd Calculation

9.2.3 Application Curves

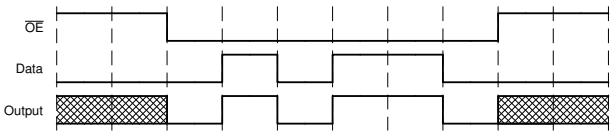

图 9-2. Typical application timing diagram

10 Power Supply Recommendations

The power supply can be any voltage between the minimum and maximum supply voltage rating located in the 节 6.3. Each V_{CC} terminal should have a bypass capacitor to prevent power disturbance. A 0.1-μF capacitor is recommended for this device. It is acceptable to parallel multiple bypass caps to reject different frequencies of noise. The 0.1-μF and 1-μF capacitors are commonly used in parallel. The bypass capacitor should be installed as close to the power terminal as possible for best results, as shown in 图 11-1.

11 Layout

11.1 Layout Guidelines

When using multiple-input and multiple-channel logic devices inputs must not ever be left floating. In many cases, functions or parts of functions of digital logic devices are unused; for example, when only two inputs of a triple-input AND gate are used. Such unused input pins must not be left unconnected because the undefined voltages at the outside connections result in undefined operational states. All unused inputs of digital logic devices must be connected to a logic high or logic low voltage, as defined by the input voltage specifications, to prevent them from floating. The logic level that must be applied to any particular unused input depends on the function of the device. Generally, the inputs are tied to GND or V_{CC}, whichever makes more sense for the logic function or is more convenient.

11.2 Layout Example

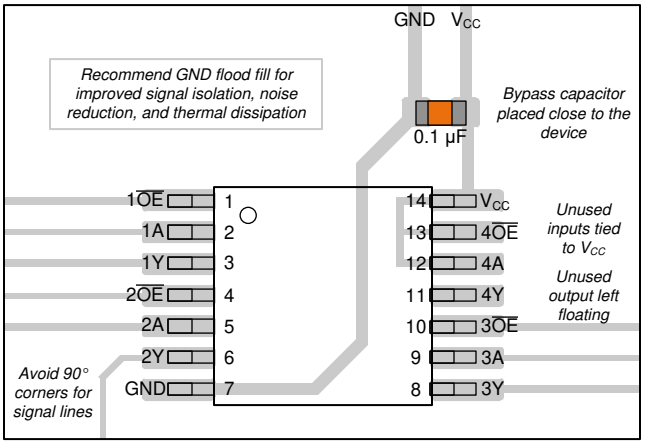

图 11-1. Example layout for the SN74HC125

Copyright © 2023 Texas Instruments Incorporated

12 Device and Documentation Support

12.1 Documentation Support

12.1.1 Related Documentation

For related documentation see the following:

- HCMOS Design Considerations
- CMOS Power Consumption and CPD Calculation
- Designing with Logic

12.2 Related Links

The table below lists quick access links. Categories include technical documents, support and community resources, tools and software, and quick access to sample or buy.

12.3 支持资源

TI E2E™ 支持论坛是工程师的重要参考资料，可直接从专家获得快速、经过验证的解答和设计帮助。搜索现有解答或提出自己的问题可获得所需的快速设计帮助。

链接的内容由各个贡献者“按原样”提供。这些内容并不构成 TI 技术规范，并且不一定反映 TI 的观点；请参阅 TI 的《使用条款》。

12.4 Trademarks

TI E2E™ is a trademark of Texas Instruments.
所有商标均为其各自所有者的财产。

12.5 静电放电警告



静电放电 (ESD) 会损坏这个集成电路。德州仪器 (TI) 建议通过适当的预防措施处理所有集成电路。如果不遵守正确的处理和安装程序，可能会损坏集成电路。

ESD 的损坏小至导致微小的性能降级，大至整个器件故障。精密的集成电路可能更容易受到损坏，这是因为非常细微的参数更改都可能会导致器件与其发布的规格不相符。

12.6 术语表

TI 术语表　　本术语表列出并解释了术语、首字母缩略词和定义。

13 Mechanical, Packaging, and Orderable Information

The following pages include mechanical, packaging, and orderable information. This information is the most current data available for the designated devices. This data is subject to change without notice and revision of this document. For browser-based versions of this data sheet, refer to the left-hand navigation.

Copyright © 2023 Texas Instruments Incorporated

PACKAGING INFORMATION

Orderable part number	Status (1)	Material type (2)	Package | Pins	Package qty | Carrier	RoHS (3)	Lead finish/ Ball material (4)	MSL rating/ Peak reflow (5)	Op temp (°C)	Part marking (6)
5962-87721012A	Active	Production	LCCC (FK) | 20	55 | TUBE	No	SNPB	N/A for Pkg Type	-55 to 125	5962-87721012A SNJ54HC 125FK
5962-8772101CA	Active	Production	CDIP (J) | 14	25 | TUBE	No	SNPB	N/A for Pkg Type	-55 to 125	5962-8772101CA SNJ54HC125J
SN54HC125J	Active	Production	CDIP (J) | 14	25 | TUBE	No	SNPB	N/A for Pkg Type	-55 to 125	SN54HC125J
SN54HC125J.A	Active	Production	CDIP (J) | 14	25 | TUBE	No	SNPB	N/A for Pkg Type	-55 to 125	SN54HC125J
SN74HC125D	Obsolete	Production	SOIC (D) | 14	-	-	Call TI	Call TI	-40 to 85	HC125
SN74HC125DBR	Active	Production	SSOP (DB) | 14	2000 | LARGE T&R	Yes	NIPDAU	Level-1-260C-UNLIM	-40 to 85	HC125
SN74HC125DBR.A	Active	Production	SSOP (DB) | 14	2000 | LARGE T&R	Yes	NIPDAU	Level-1-260C-UNLIM	-40 to 85	HC125
SN74HC125DR	Active	Production	SOIC (D) | 14	2500 | LARGE T&R	Yes	NIPDAU | SN	Level-1-260C-UNLIM	-40 to 85	HC125
SN74HC125DR.A	Active	Production	SOIC (D) | 14	2500 | LARGE T&R	Yes	NIPDAU	Level-1-260C-UNLIM	-40 to 85	HC125
SN74HC125DRG4	Active	Production	SOIC (D) | 14	2500 | LARGE T&R	Yes	NIPDAU	Level-1-260C-UNLIM	-40 to 85	HC125
SN74HC125DRG4.A	Active	Production	SOIC (D) | 14	2500 | LARGE T&R	Yes	NIPDAU	Level-1-260C-UNLIM	-40 to 85	HC125
SN74HC125DT	Obsolete	Production	SOIC (D) | 14	-	-	Call TI	Call TI	-40 to 85	HC125
SN74HC125N	Active	Production	PDIP (N) | 14	25 | TUBE	Yes	NIPDAU	N/A for Pkg Type	-40 to 85	SN74HC125N
SN74HC125N.A	Active	Production	PDIP (N) | 14	25 | TUBE	Yes	NIPDAU	N/A for Pkg Type	-40 to 85	SN74HC125N
SN74HC125NE4	Active	Production	PDIP (N) | 14	25 | TUBE	Yes	NIPDAU	N/A for Pkg Type	-40 to 85	SN74HC125N
SN74HC125NSR	Active	Production	SOP (NS) | 14	2000 | LARGE T&R	Yes	NIPDAU	Level-1-260C-UNLIM	-40 to 85	HC125
SN74HC125NSR.A	Active	Production	SOP (NS) | 14	2000 | LARGE T&R	Yes	NIPDAU	Level-1-260C-UNLIM	-40 to 85	HC125
SN74HC125PWR	Active	Production	TSSOP (PW) | 14	2000 | LARGE T&R	Yes	NIPDAU | SN	Level-1-260C-UNLIM	-40 to 85	HC125
SN74HC125PWR.A	Active	Production	TSSOP (PW) | 14	2000 | LARGE T&R	Yes	NIPDAU	Level-1-260C-UNLIM	-40 to 85	HC125
SN74HC125PWRG4	Active	Production	TSSOP (PW) | 14	2000 | LARGE T&R	Yes	NIPDAU	Level-1-260C-UNLIM	-40 to 85	HC125
SN74HC125PWRG4.A	Active	Production	TSSOP (PW) | 14	2000 | LARGE T&R	Yes	NIPDAU	Level-1-260C-UNLIM	-40 to 85	HC125
SN74HC125PWT	Obsolete	Production	TSSOP (PW) | 14	-	-	Call TI	Call TI	-40 to 85	HC125
SNJ54HC125FK	Active	Production	LCCC (FK) | 20	55 | TUBE	No	SNPB	N/A for Pkg Type	-55 to 125	5962-87721012A SNJ54HC 125FK

Orderable part number	Status (1)	Material type (2)	Package | Pins	Package qty | Carrier	RoHS (3)	Lead finish/ Ball material (4)	MSL rating/ Peak reflow (5)	Op temp (°C)	Part marking (6)
SNJ54HC125FK.A	Active	Production	LCCC (FK) | 20	55 | TUBE	No	SNPB	N/A for Pkg Type	-55 to 125	5962-87721012A SNJ54HC 125FK
SNJ54HC125J	Active	Production	CDIP (J) | 14	25 | TUBE	No	SNPB	N/A for Pkg Type	-55 to 125	5962-8772101CA SNJ54HC125J
SNJ54HC125J.A	Active	Production	CDIP (J) | 14	25 | TUBE	No	SNPB	N/A for Pkg Type	-55 to 125	5962-8772101CA SNJ54HC125J

(1) Status: For more details on status, see our product life cycle.

(2) Material type: When designated, preproduction parts are prototypes/experimental devices, and are not yet approved or released for full production. Testing and final process, including without limitation quality assurance, reliability performance testing, and/or process qualification, may not yet be complete, and this item is subject to further changes or possible discontinuation. If available for ordering, purchases will be subject to an additional waiver at checkout, and are intended for early internal evaluation purposes only. These items are sold without warranties of any kind.

(3) RoHS values: Yes, No, RoHS Exempt. See the TI RoHS Statement for additional information and value definition.

(4) Lead finish/Ball material: Parts may have multiple material finish options. Finish options are separated by a vertical ruled line. Lead finish/Ball material values may wrap to two lines if the finish value exceeds the maximum column width.

(5) MSL rating/Peak reflow: The moisture sensitivity level ratings and peak solder (reflow) temperatures. In the event that a part has multiple moisture sensitivity ratings, only the lowest level per JEDEC standards is shown. Refer to the shipping label for the actual reflow temperature that will be used to mount the part to the printed circuit board.

(6) Part marking: There may be an additional marking, which relates to the logo, the lot trace code information, or the environmental category of the part.

Multiple part markings will be inside parentheses. Only one part marking contained in parentheses and separated by a "~" will appear on a part. If a line is indented then it is a continuation of the previous line and the two combined represent the entire part marking for that device.

Important Information and Disclaimer: The information provided on this page represents TI's knowledge and belief as of the date that it is provided. TI bases its knowledge and belief on information provided by third parties, and makes no representation or warranty as to the accuracy of such information. Efforts are underway to better integrate information from third parties. TI has taken and continues to take reasonable steps to provide representative and accurate information but may not have conducted destructive testing or chemical analysis on incoming materials and chemicals. TI and TI suppliers consider certain information to be proprietary, and thus CAS numbers and other limited information may not be available for release.

In no event shall TI's liability arising out of such information exceed the total purchase price of the TI part(s) at issue in this document sold by TI to Customer on an annual basis.

OTHER QUALIFIED VERSIONS OF SN54HC125, SN74HC125 :

- Catalog : SN74HC125
- Automotive : SN74HC125-Q1, SN74HC125-Q1
- Military : SN54HC125

NOTE: Qualified Version Definitions:

- Catalog - TI's standard catalog product
- Automotive - Q100 devices qualified for high-reliability automotive applications targeting zero defects
- Military - QML certified for Military and Defense Applications

TAPE AND REEL INFORMATION

REEL DIMENSIONS

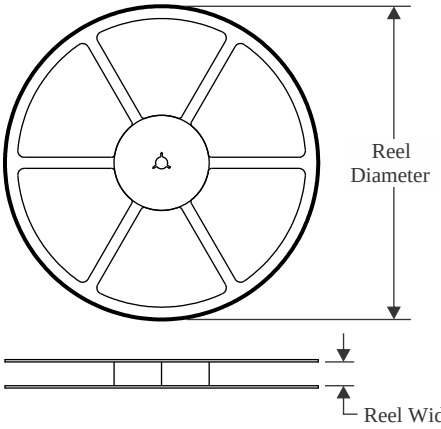

TAPE DIMENSIONS

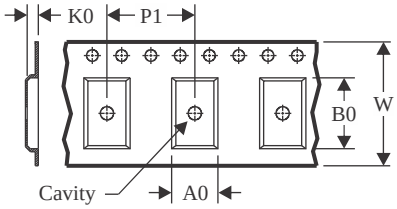

A0	Dimension designed to accommodate the component width
B0	Dimension designed to accommodate the component length
K0	Dimension designed to accommodate the component thickness
W	Overall width of the carrier tape
P1	Pitch between successive cavity centers

QUADRANT ASSIGNMENTS FOR PIN 1 ORIENTATION IN TAPE

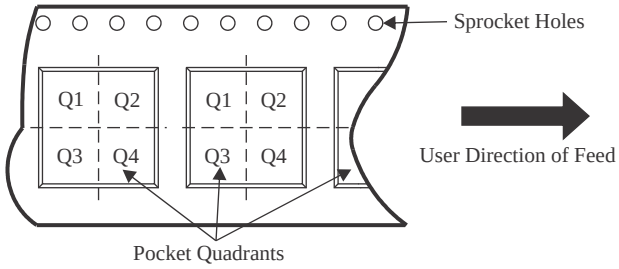

*All dimensions are nominal

Device	Package Type	Package Drawing	Pins	SPQ	Reel Diameter (mm)	Reel Width W1 (mm)	A0 (mm)	B0 (mm)	K0 (mm)	P1 (mm)	W (mm)	Pin1 Quadrant
SN74HC125DBR	SSOP	DB	14	2000	330.0	16.4	8.35	6.6	2.4	12.0	16.0	Q1
SN74HC125DRG4	SOIC	D	14	2500	330.0	16.4	6.5	9.0	2.1	8.0	16.0	Q1
SN74HC125NSR	SOP	NS	14	2000	330.0	16.4	8.45	10.55	2.5	12.0	16.2	Q1
SN74HC125PWR	TSSOP	PW	14	2000	330.0	12.4	6.9	5.3	1.6	8.0	12.0	Q1
SN74HC125PWR	TSSOP	PW	14	2000	330.0	12.4	6.9	5.6	1.6	8.0	12.0	Q1
SN74HC125PWR	TSSOP	PW	14	2000	330.0	12.4	6.9	5.6	1.6	8.0	12.0	Q1
SN74HC125PWRG4	TSSOP	PW	14	2000	330.0	12.4	6.9	5.3	1.6	8.0	12.0	Q1
SN74HC125PWRG4	TSSOP	PW	14	2000	330.0	12.4	6.9	5.6	1.6	8.0	12.0	Q1

TAPE AND REEL BOX DIMENSIONS

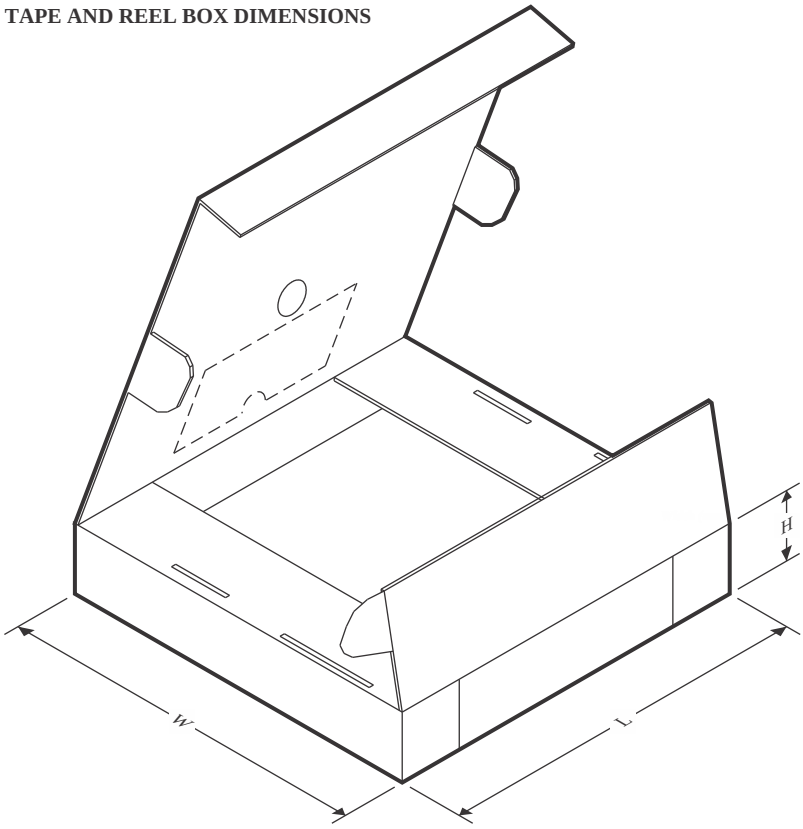

*All dimensions are nominal

Device	Package Type	Package Drawing	Pins	SPQ	Length (mm)	Width (mm)	Height (mm)
SN74HC125DBR	SSOP	DB	14	2000	353.0	353.0	32.0
SN74HC125DRG4	SOIC	D	14	2500	353.0	353.0	32.0
SN74HC125NSR	SOP	NS	14	2000	353.0	353.0	32.0
SN74HC125PWR	TSSOP	PW	14	2000	367.0	367.0	35.0
SN74HC125PWR	TSSOP	PW	14	2000	356.0	356.0	35.0
SN74HC125PWR	TSSOP	PW	14	2000	353.0	353.0	32.0
SN74HC125PWRG4	TSSOP	PW	14	2000	367.0	367.0	35.0
SN74HC125PWRG4	TSSOP	PW	14	2000	353.0	353.0	32.0

TUBE

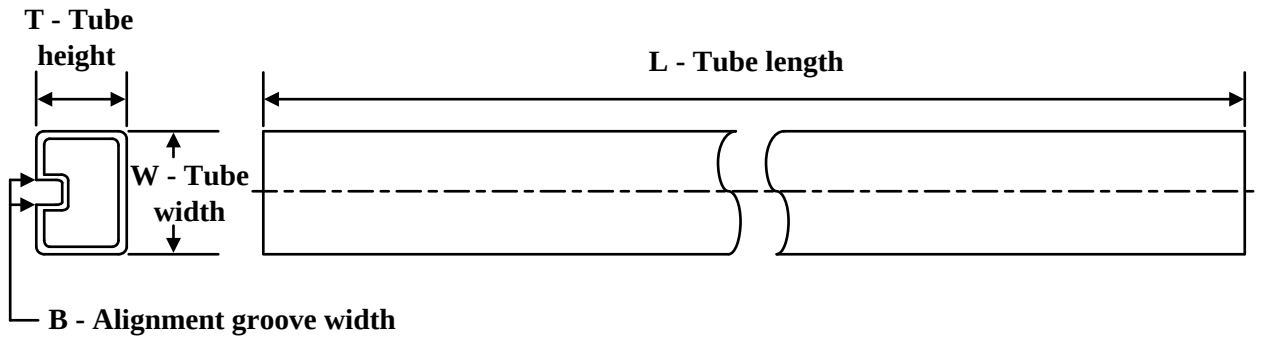

*All dimensions are nominal

Device	Package Name	Package Type	Pins	SPQ	L (mm)	W (mm)	T (µm)	B (mm)
5962-87721012A	FK	LCCC	20	55	506.98	12.06	2030	NA
SN74HC125N	N	PDIP	14	25	506	13.97	11230	4.32
SN74HC125N	N	PDIP	14	25	506	13.97	11230	4.32
SN74HC125N.A	N	PDIP	14	25	506	13.97	11230	4.32
SN74HC125N.A	N	PDIP	14	25	506	13.97	11230	4.32
SN74HC125NE4	N	PDIP	14	25	506	13.97	11230	4.32
SN74HC125NE4	N	PDIP	14	25	506	13.97	11230	4.32
SNJ54HC125FK	FK	LCCC	20	55	506.98	12.06	2030	NA
SNJ54HC125FK.A	FK	LCCC	20	55	506.98	12.06	2030	NA

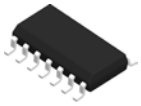

PACKAGE OUTLINE

D0014A

SOIC - 1.75 mm max height

SMALL OUTLINE INTEGRATED CIRCUIT

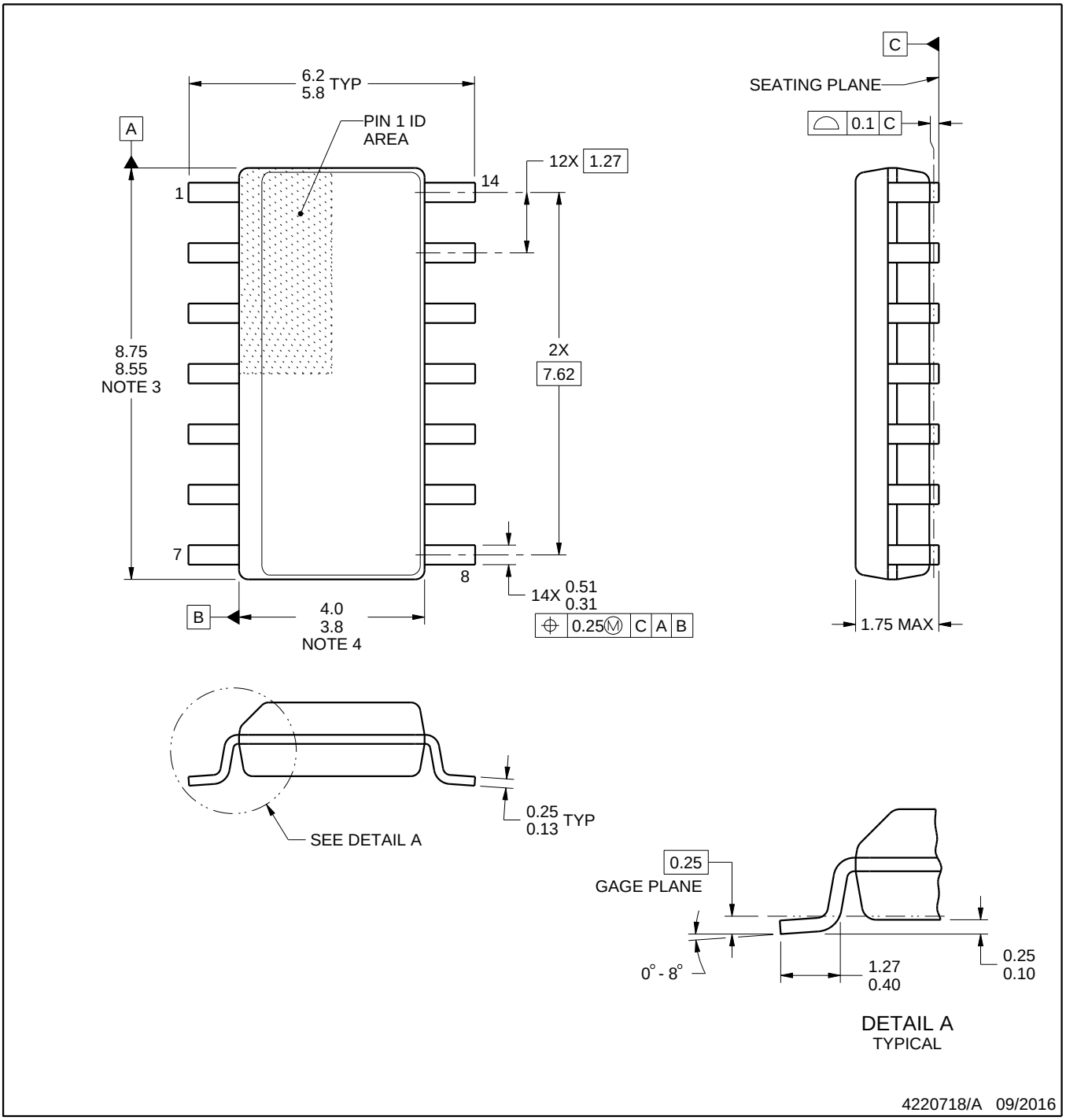

NOTES:

1. All linear dimensions are in millimeters. Dimensions in parenthesis are for reference only. Dimensioning and tolerancing per ASME Y14.5M.
2. This drawing is subject to change without notice.
3. This dimension does not include mold flash, protrusions, or gate burrs. Mold flash, protrusions, or gate burrs shall not exceed 0.15 mm, per side.
4. This dimension does not include interlead flash. Interlead flash shall not exceed 0.43 mm, per side.
5. Reference JEDEC registration MS-012, variation AB.

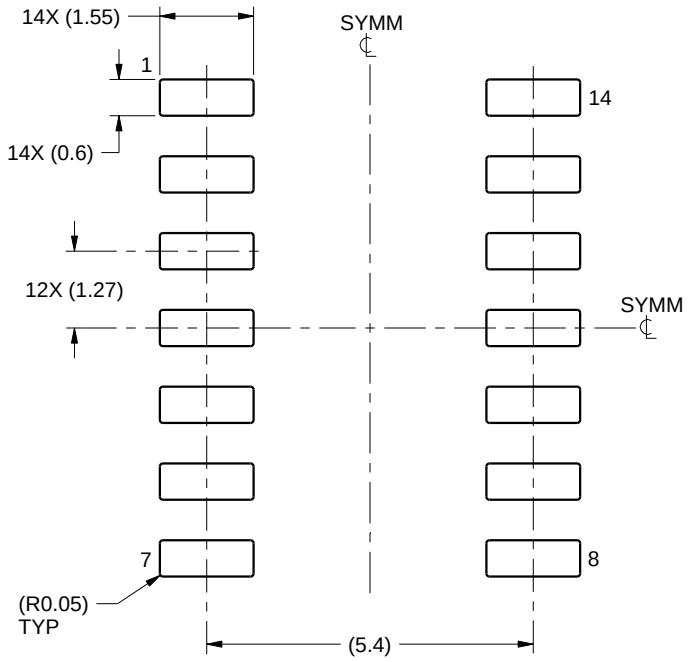

LAND PATTERN EXAMPLE
SCALE:8X

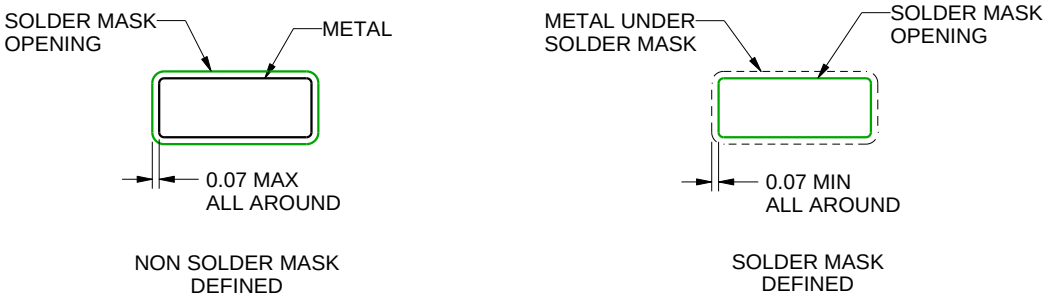

SOLDER MASK DETAILS

4220718/A 09/2016

NOTES: (continued)

6. Publication IPC-7351 may have alternate designs.
7. Solder mask tolerances between and around signal pads can vary based on board fabrication site.

EXAMPLE STENCIL DESIGN

D0014A

SOIC - 1.75 mm max height

SMALL OUTLINE INTEGRATED CIRCUIT

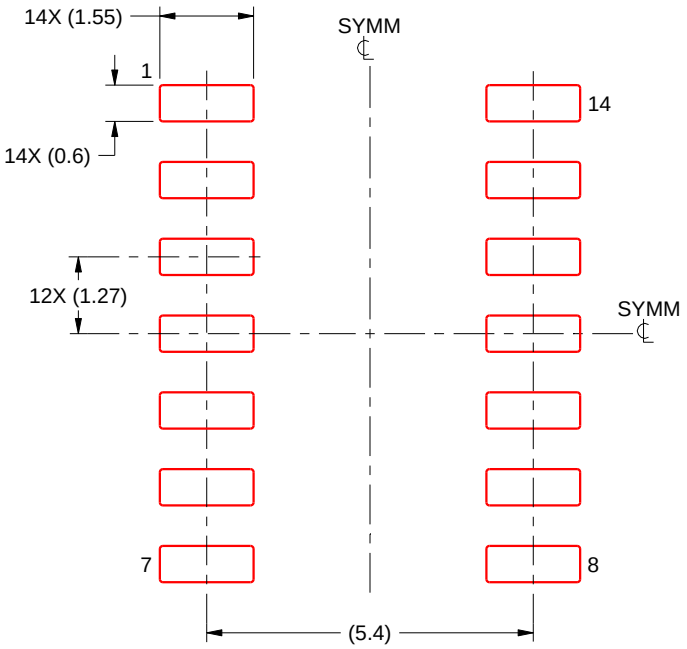

SOLDER PASTE EXAMPLE
BASED ON 0.125 mm THICK STENCIL
SCALE:8X

4220718/A 09/2016

NOTES: (continued)

8. Laser cutting apertures with trapezoidal walls and rounded corners may offer better paste release. IPC-7525 may have alternate design recommendations.
9. Board assembly site may have different recommendations for stencil design.

MECHANICAL DATA

NS (R-PDSO-G)** **PLASTIC SMALL-OUTLINE PACKAGE**

14-PINS SHOWN

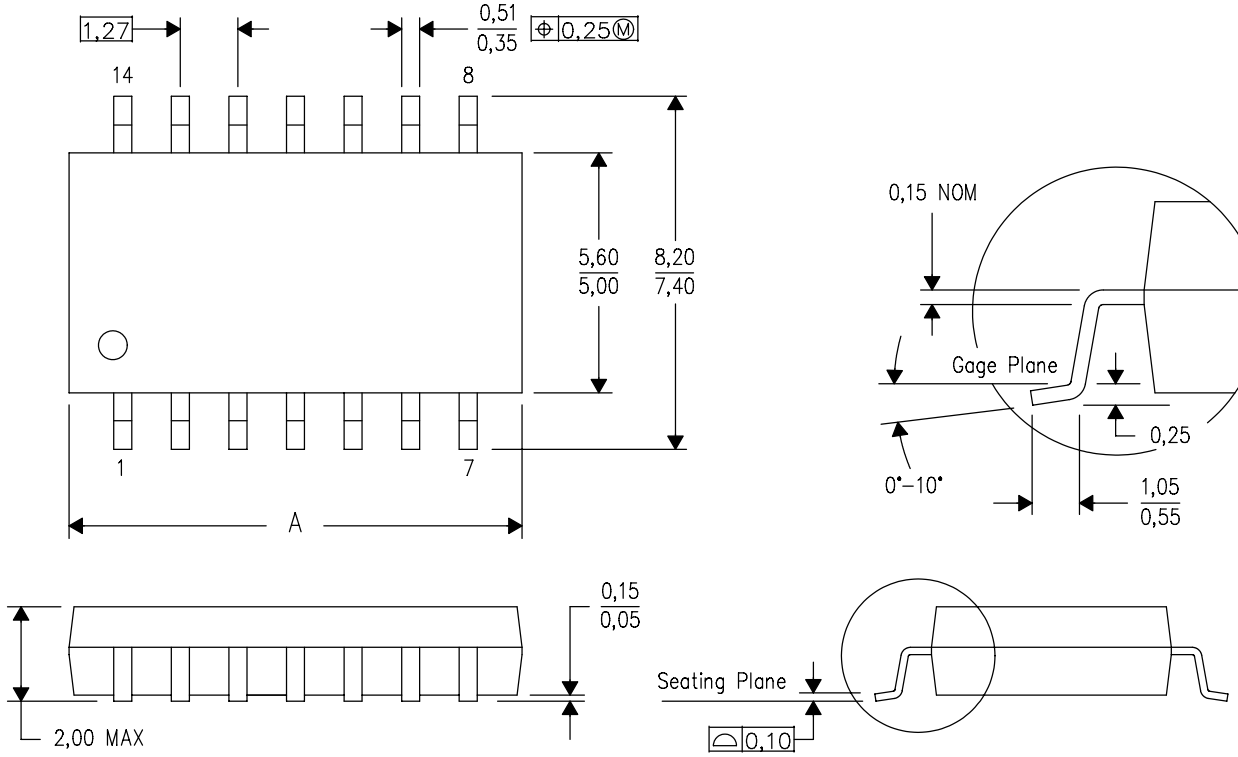

DIM \ PINS **	14	16	20	24
A MAX	10,50	10,50	12,90	15,30
A MIN	9,90	9,90	12,30	14,70

4040062/C 03/03

NOTES:
A. All linear dimensions are in millimeters.
B. This drawing is subject to change without notice.
C. Body dimensions do not include mold flash or protrusion, not to exceed 0,15.

PACKAGE OUTLINE

DB0014A

SSOP - 2 mm max height

SMALL OUTLINE PACKAGE

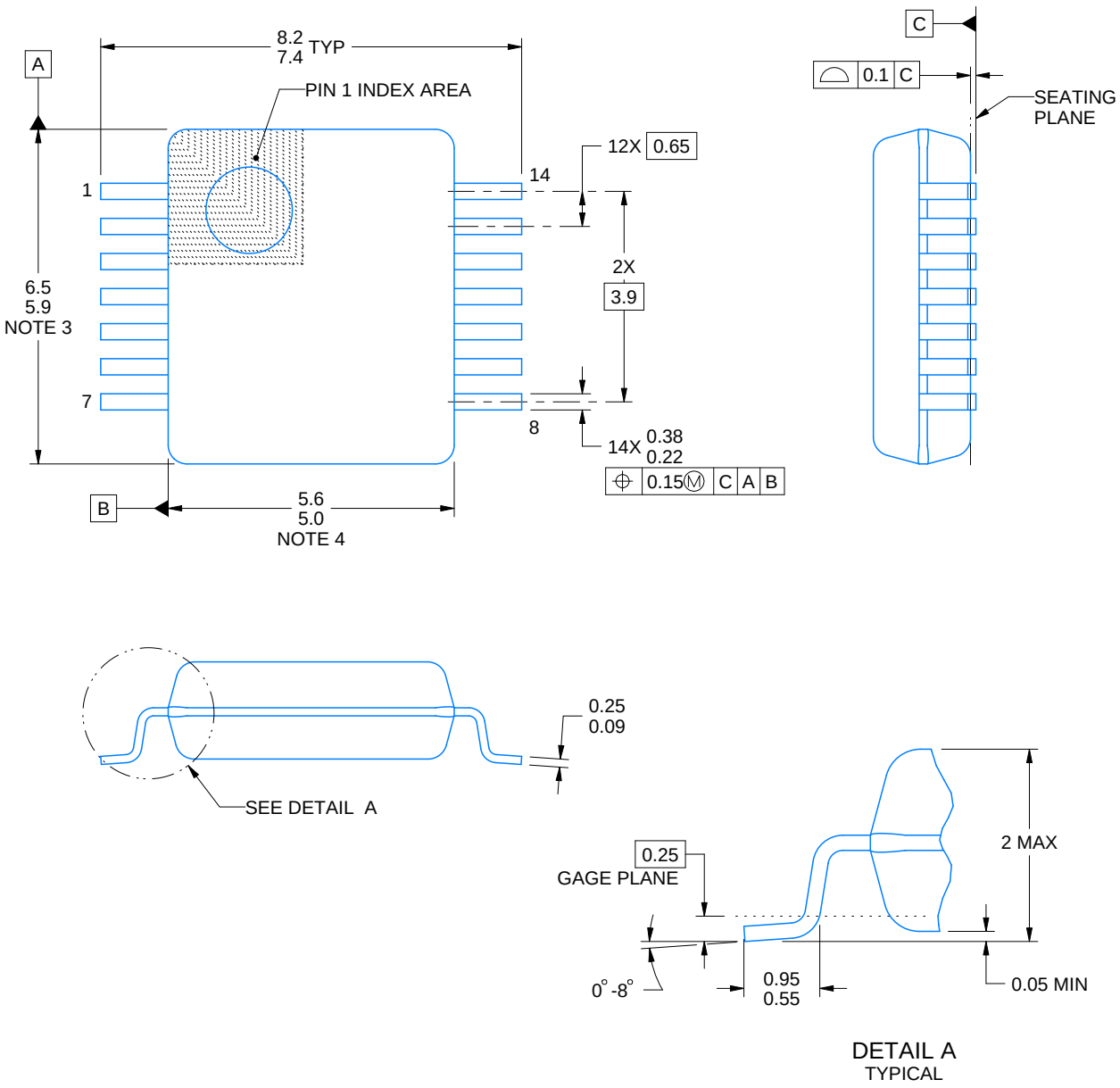

4220762/A 05/2024

NOTES:

1. All linear dimensions are in millimeters. Any dimensions in parenthesis are for reference only. Dimensioning and tolerancing per ASME Y14.5M.
2. This drawing is subject to change without notice.
3. This dimension does not include mold flash, protrusions, or gate burrs. Mold flash, protrusions, or gate burrs shall not exceed 0.15 mm per side.
4. Reference JEDEC registration MO-150.

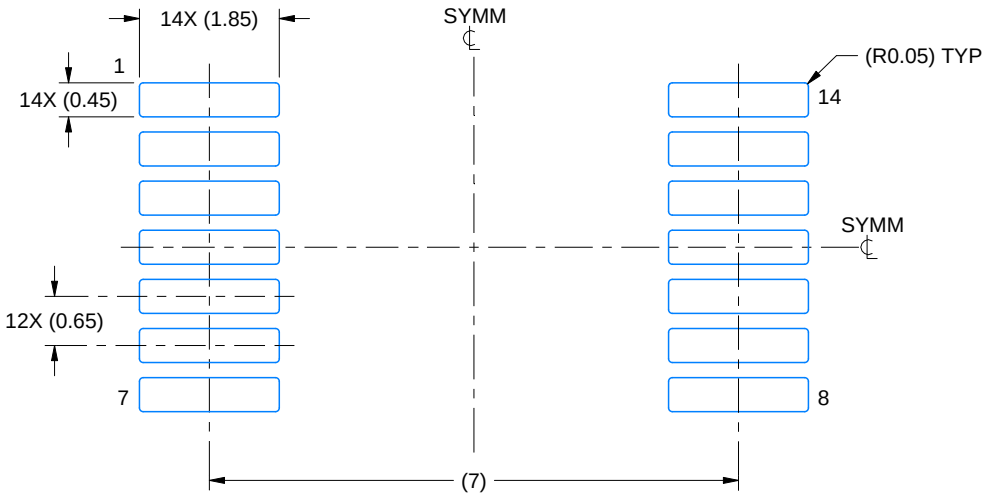

LAND PATTERN EXAMPLE
EXPOSED METAL SHOWN
SCALE: 10X

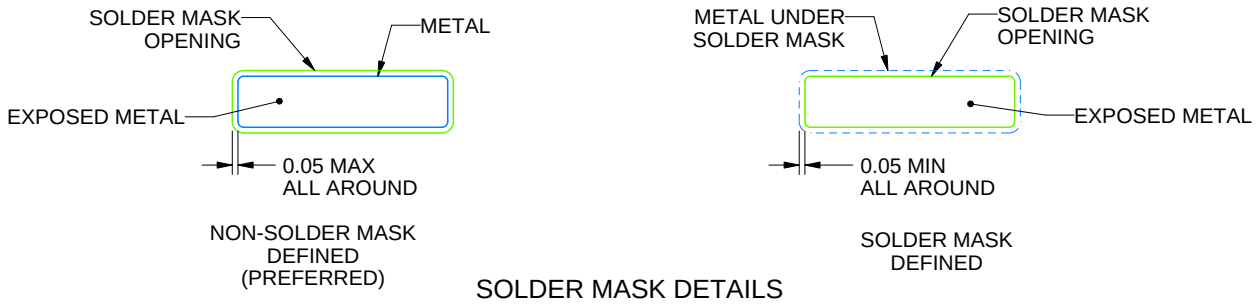

SOLDER MASK DETAILS

4220762/A 05/2024

NOTES: (continued)

5. Publication IPC-7351 may have alternate designs.
6. Solder mask tolerances between and around signal pads can vary based on board fabrication site.

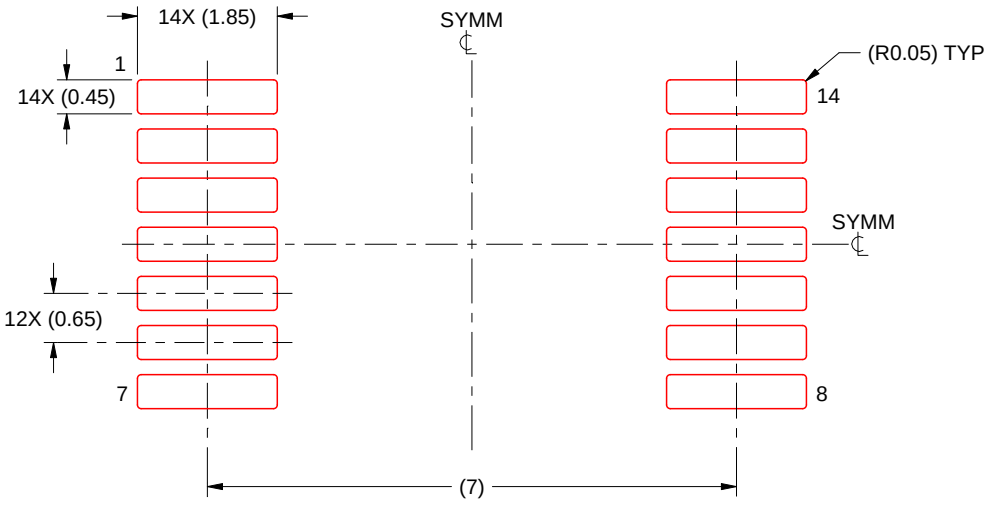

SOLDER PASTE EXAMPLE
BASED ON 0.125 mm THICK STENCIL
SCALE: 10X

4220762/A 05/2024

NOTES: (continued)

7. Laser cutting apertures with trapezoidal walls and rounded corners may offer better paste release. IPC-7525 may have alternate design recommendations.
8. Board assembly site may have different recommendations for stencil design.

GENERIC PACKAGE VIEW

FK 20

LCCC - 2.03 mm max height

8.89 x 8.89, 1.27 mm pitch

LEADLESS CERAMIC CHIP CARRIER

This image is a representation of the package family, actual package may vary.
Refer to the product data sheet for package details.

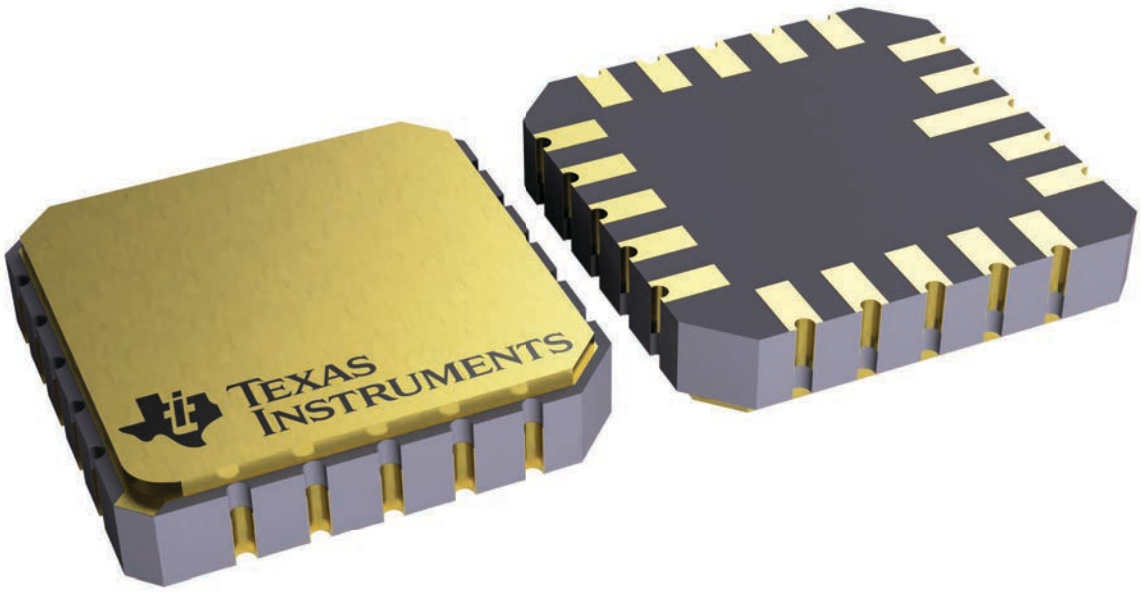

4229370VA\

GENERIC PACKAGE VIEW

J 14 CDIP - 5.08 mm max height

CERAMIC DUAL IN LINE PACKAGE

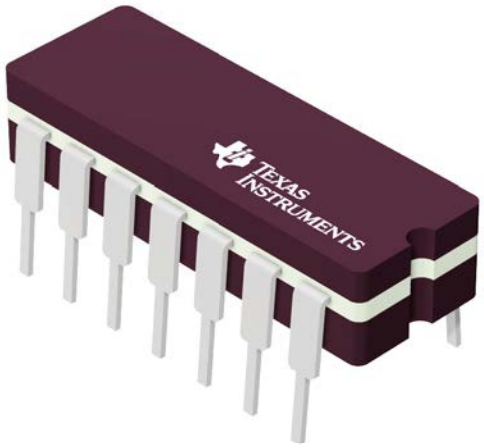

Images above are just a representation of the package family, actual package may vary.
Refer to the product data sheet for package details.

4040083-5/G



PACKAGE OUTLINE

J0014A

CDIP - 5.08 mm max height

CERAMIC DUAL IN LINE PACKAGE

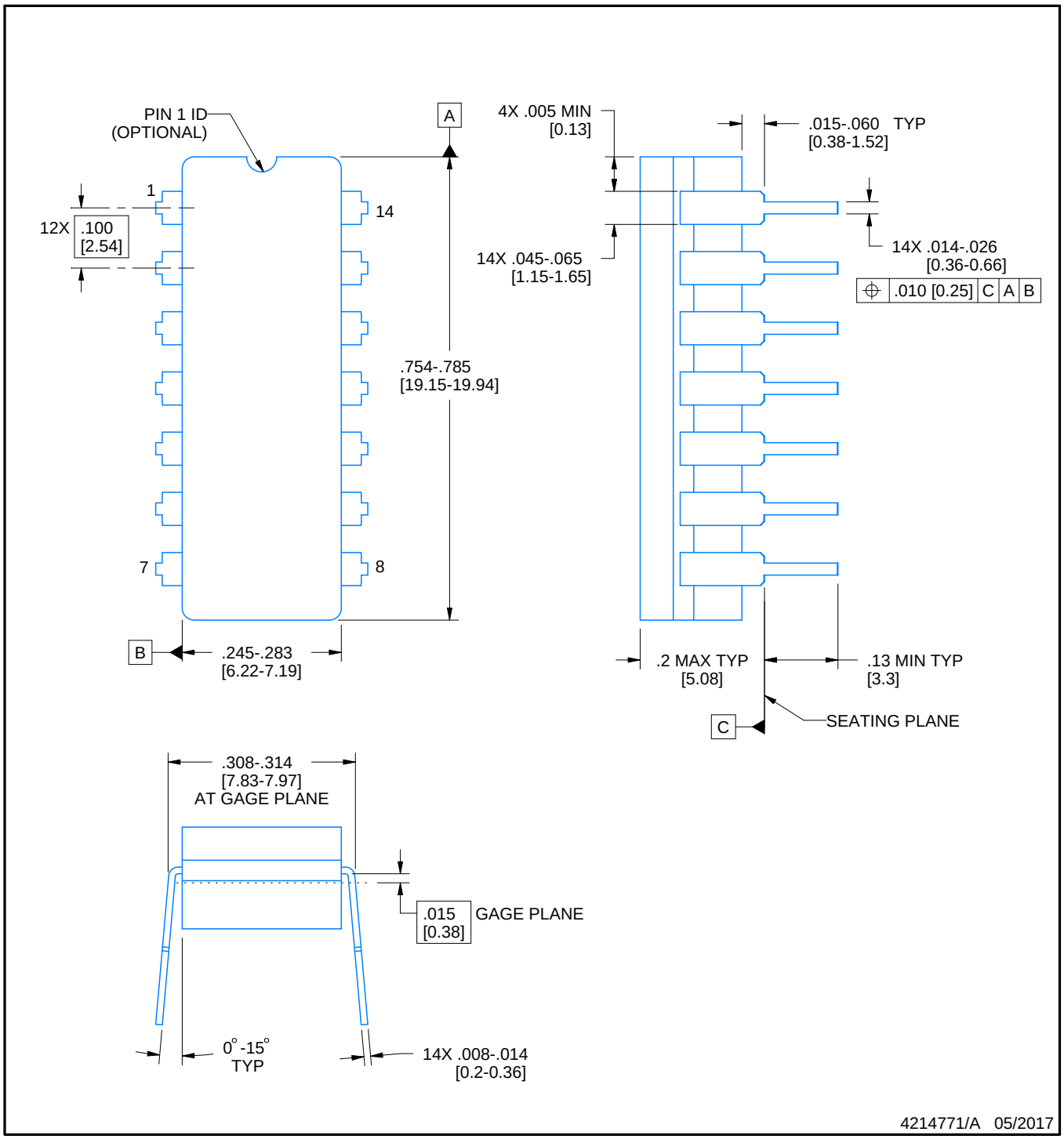

NOTES:

1. All controlling linear dimensions are in inches. Dimensions in brackets are in millimeters. Any dimension in brackets or parenthesis are for reference only. Dimensioning and tolerancing per ASME Y14.5M.
2. This drawing is subject to change without notice.
3. This package is hermitically sealed with a ceramic lid using glass frit.
4. Index point is provided on cap for terminal identification only and on press ceramic glass frit seal only.
5. Falls within MIL-STD-1835 and GDIP1-T14.

EXAMPLE BOARD LAYOUT

J0014A

CDIP - 5.08 mm max height

CERAMIC DUAL IN LINE PACKAGE

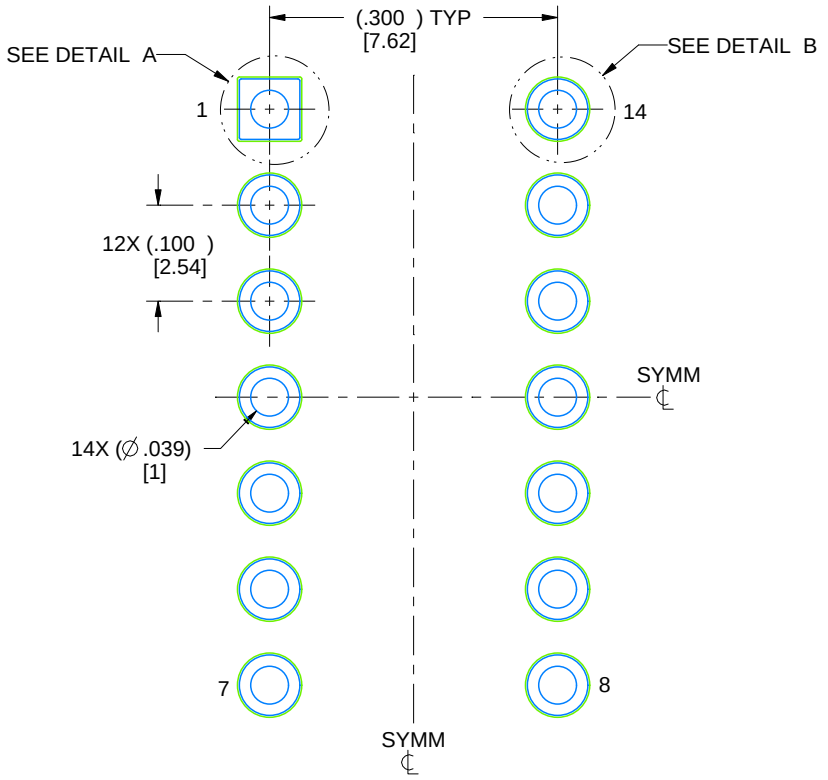

LAND PATTERN EXAMPLE
NON-SOLDER MASK DEFINED
SCALE: 5X

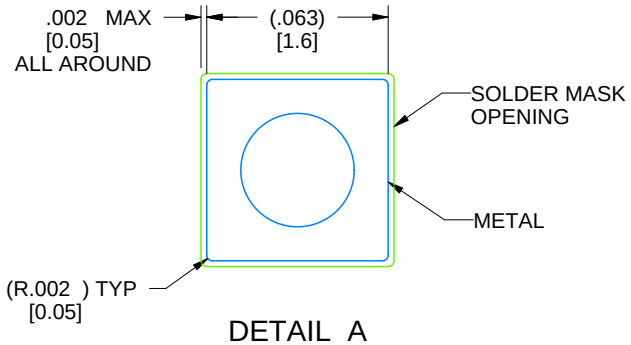

DETAIL A
SCALE: 15X

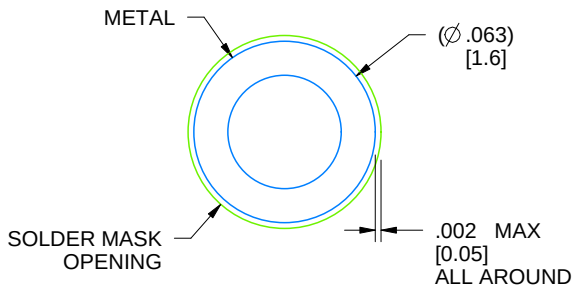

DETAIL B
13X, SCALE: 15X

4214771/A 05/2017

N (R–PDIP–T**)

PLASTIC DUAL–IN–LINE PACKAGE

16 PINS SHOWN

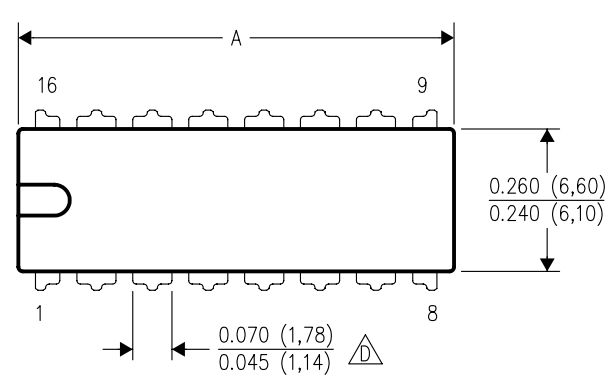

DIM \ PINS **	14	16	18	20
A MAX	0.775 (19,69)	0.775 (19,69)	0.920 (23,37)	1.060 (26,92)
A MIN	0.745 (18,92)	0.745 (18,92)	0.850 (21,59)	0.940 (23,88)
MS–001 VARIATION (C)	AA	BB	AC	AD

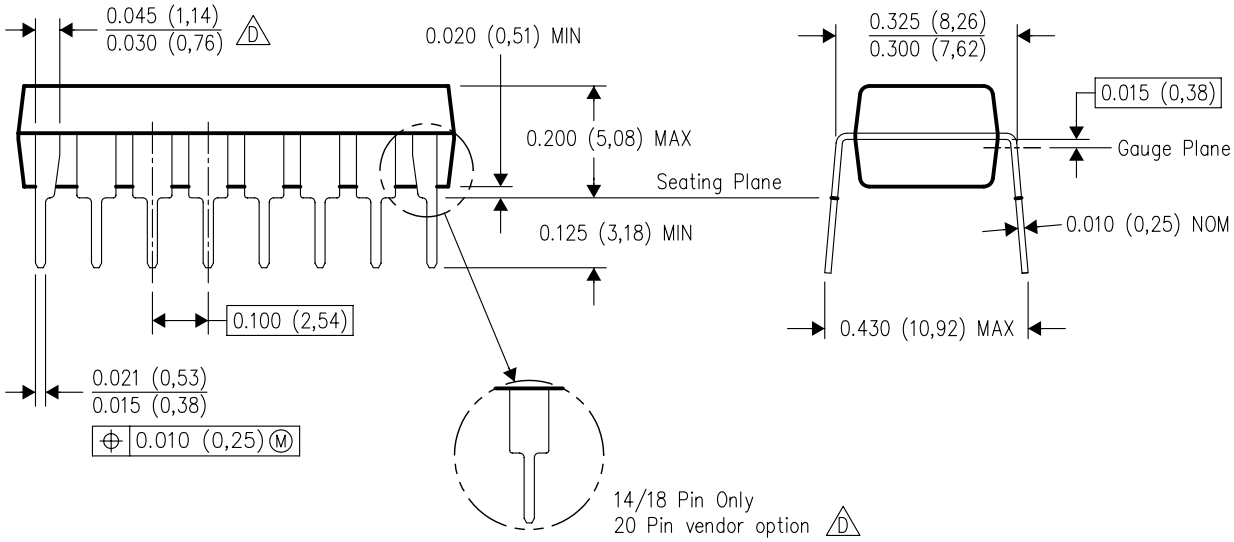

4040049/E 12/2002

NOTES:
A. All linear dimensions are in inches (millimeters).
B. This drawing is subject to change without notice.
C. Falls within JEDEC MS–001, except 18 and 20 pin minimum body length (Dim A).
D. The 20 pin end lead shoulder width is a vendor option, either half or full width.

PACKAGE OUTLINE

PW0014A

TSSOP - 1.2 mm max height

SMALL OUTLINE PACKAGE

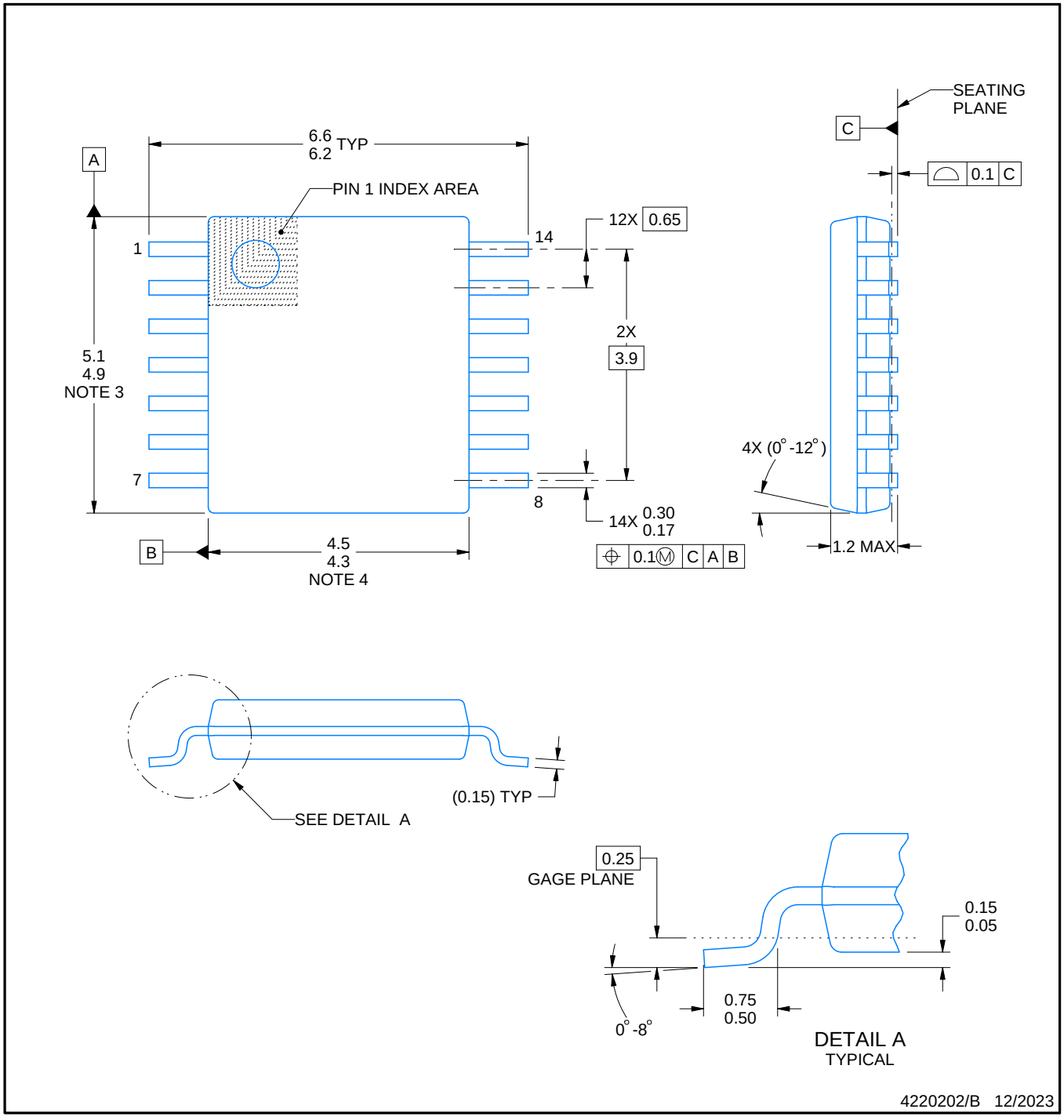

NOTES:

1. All linear dimensions are in millimeters. Any dimensions in parenthesis are for reference only. Dimensioning and tolerancing per ASME Y14.5M.
2. This drawing is subject to change without notice.
3. This dimension does not include mold flash, protrusions, or gate burrs. Mold flash, protrusions, or gate burrs shall not exceed 0.15 mm per side.
4. This dimension does not include interlead flash. Interlead flash shall not exceed 0.25 mm per side.
5. Reference JEDEC registration MO-153.

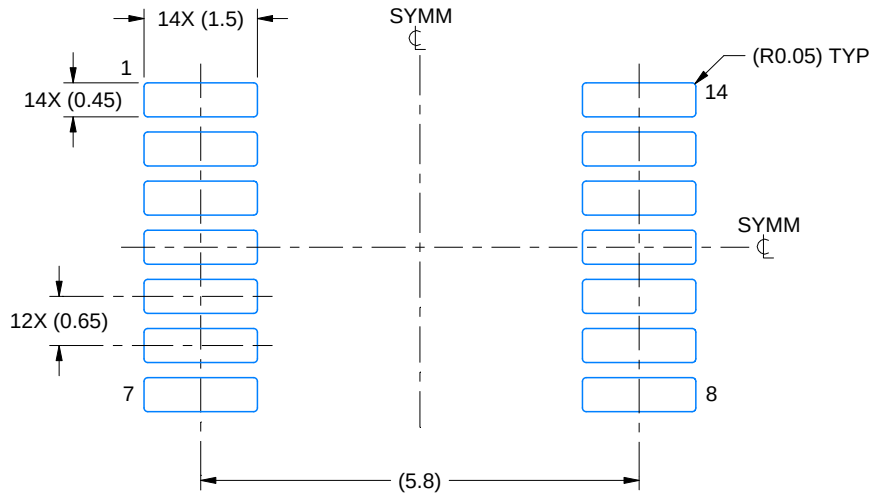

LAND PATTERN EXAMPLE
EXPOSED METAL SHOWN
SCALE: 10X

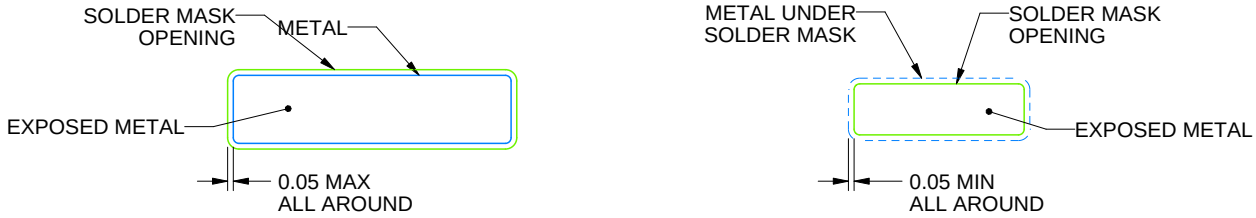

SOLDER MASK DETAILS

4220202/B 12/2023

NOTES: (continued)

6. Publication IPC-7351 may have alternate designs.
7. Solder mask tolerances between and around signal pads can vary based on board fabrication site.

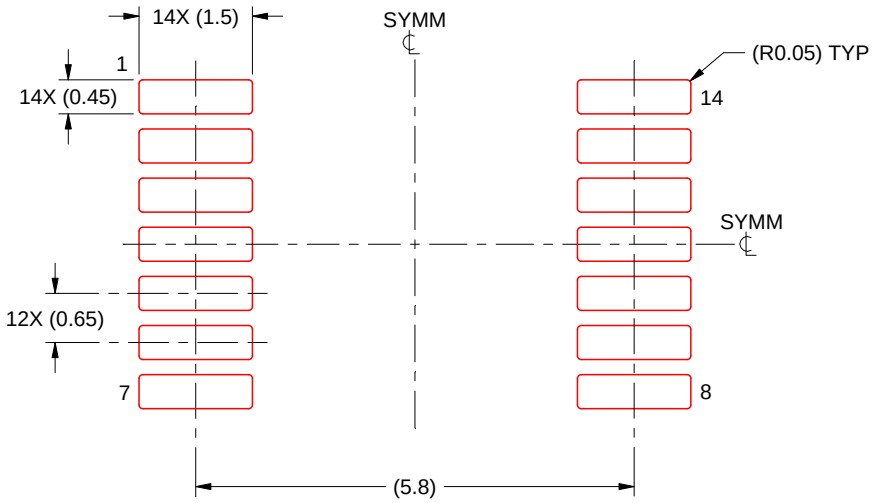

SOLDER PASTE EXAMPLE
BASED ON 0.125 mm THICK STENCIL
SCALE: 10X

4220202/B 12/2023

NOTES: (continued)

8. Laser cutting apertures with trapezoidal walls and rounded corners may offer better paste release. IPC-7525 may have alternate design recommendations.
9. Board assembly site may have different recommendations for stencil design.

重要通知和免责声明

TI“按原样”提供技术和可靠性数据（包括数据表）、设计资源（包括参考设计）、应用或其他设计建议、网络工具、安全信息和其他资源，不保证没有瑕疵且不做出任何明示或暗示的担保，包括但不限于对适销性、与某特定用途的适用性或不侵犯任何第三方知识产权的暗示担保。

这些资源可供使用 TI 产品进行设计的熟练开发人员使用。您将自行承担以下全部责任：(1) 针对您的应用选择合适的 TI 产品，(2) 设计、验证并测试您的应用，(3) 确保您的应用满足相应标准以及任何其他安全、安保法规或其他要求。

这些资源如有变更，恕不另行通知。TI 授权您仅可将这些资源用于研发本资源所述的 TI 产品的相关应用。严禁以其他方式对这些资源进行复制或展示。您无权使用任何其他 TI 知识产权或任何第三方知识产权。对于因您对这些资源的使用而对 TI 及其代表造成的任何索赔、损害、成本、损失和债务，您将全额赔偿，TI 对此概不负责。

TI 提供的产品受 TI 销售条款)、TI 通用质量指南 或 ti.com 上其他适用条款或 TI 产品随附的其他适用条款的约束。TI 提供这些资源并不会扩展或以其他方式更改 TI 针对 TI 产品发布的适用的担保或担保免责声明。 除非德州仪器 (TI) 明确将某产品指定为定制产品或客户特定产品，否则其产品均为按确定价格收入目录的标准通用器件。

TI 反对并拒绝您可能提出的任何其他或不同的条款。

版权所有 © 2026，德州仪器 (TI) 公司

最后更新日期：2025 年 10 月