深圳市兴华鑫电子科技有限公司
Shenzhen xinghuaxin Electronic Technology Co., Ltd

承認書

SPECIFICATION FOR APPROVAL

客戶(Customer)：

客戶料號(Customer P/N)：

興華鑫型號(Supplier P/N)：XHXDZ-8530-3V

產品名稱(Description)：蜂鸣器 (Buzzer)

產品規格(Specification)：SMD-8.5*8.5*3.0MM

客戶承認欄 (Customer Authorization Signature)	深圳市興華鑫電子科技有限公司 承認欄 (Supplier Audit)		
	審核	檢查	制作
	唐国兴	唐玉来	吴银娟
	日期： 2022 年 04 月 19 日 版次：A		

声音让生活更精彩!

地址：深圳市宝安区新安街道新乐社区新乐路 88 号厂房三层
TEL：0755-27892904
E-mail：jacky.tang@jsxhxdz.com
Http：www.jsxhxdz.com

深圳市兴华鑫电子科技有限公司

产品规格内容

A. SCOPE

This specification applies magnetic buzzer,XHXDZ-**8530-3V**

B.SPECIFICATION

No.	Item	Unit	Specification	Condition
1	Oscillation Frequency	Hz	2700	Vo-p=1/2duty , square wave
2	Operating Voltage	Vo-p	2.5 ~ 4.5	
3	Rated Voltage	Vo-p	3.6	
4	Current Consumption	mA	MAX. 100	at Rated Voltage
5	Sound Pressure Level	dB	MIN. 85	at 10cm at Rated Voltage
6	Coil Resistance	Ω	16±3	
7	Operating Temperature	℃	-40 ~ +85	
8	Storage Temperature	℃	-40 ~ +85	
9	Dimension	mm	8.5 x 8.5 x H3.0	See appearance drawing
10	Weight (MAX)	gram	0.8	
11	Housing Material		LCP(Black)	
12	Leading Pin		Tin Plated Brass(Sn)	See appearance drawing
13	Environmental Protection Regulation		RoHS	

C. APPEARANCE DRAWING

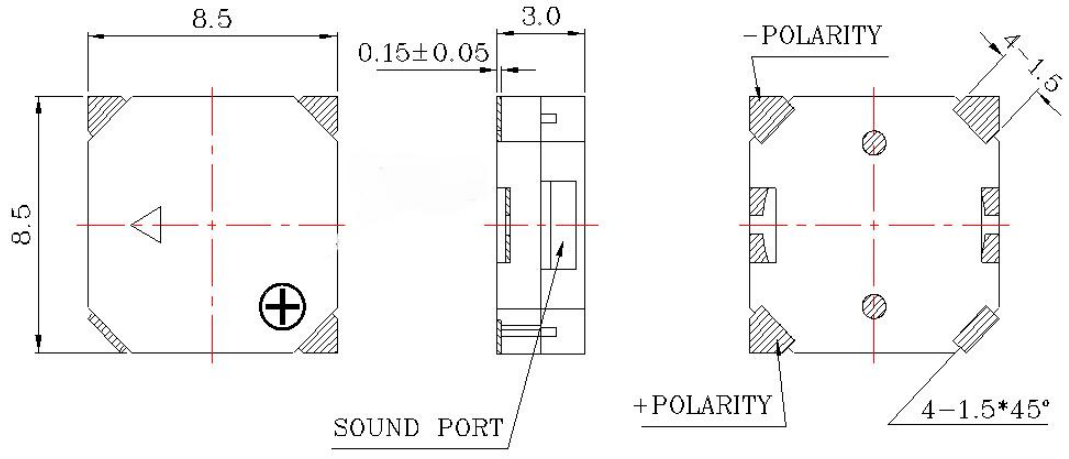

Tol : ± 0.3 **Unit: mm**

深圳市兴华鑫电子科技有限公司

产品规格内容

D.TESTING METHOD

Standard Measurement conditions

Temperature:25±2℃ Humidity:45-65%

Acoustic Characteristics:

The oscillation frequency, current consumption and sound pressure are measured by the measuring instruments shown below

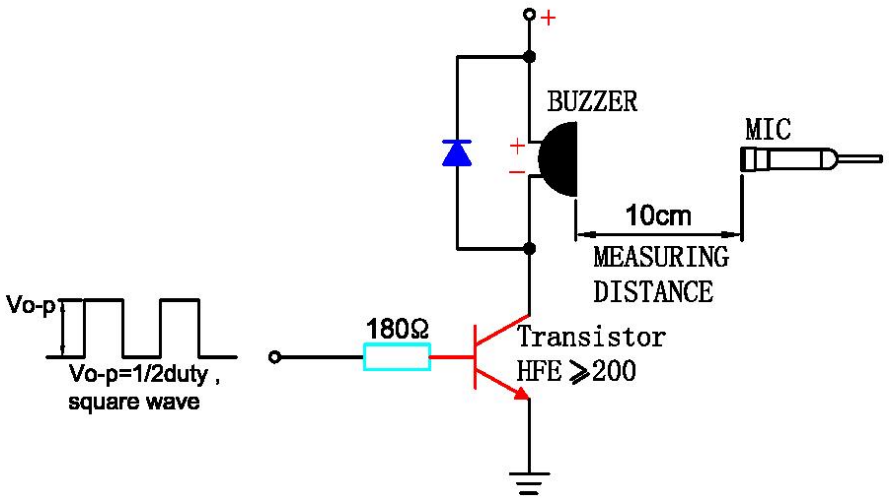

In the measuring test, buzzer is placed as follows:

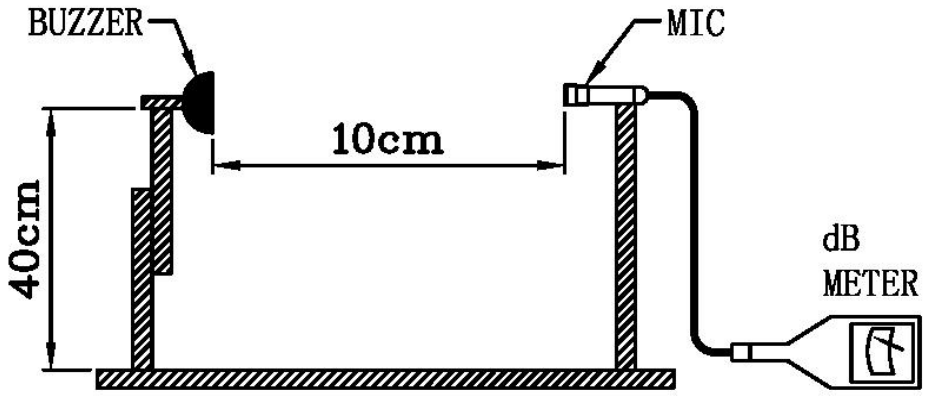

深圳市兴华鑫电子科技有限公司

产品规格内容

E. Typical Frequency Response Curve

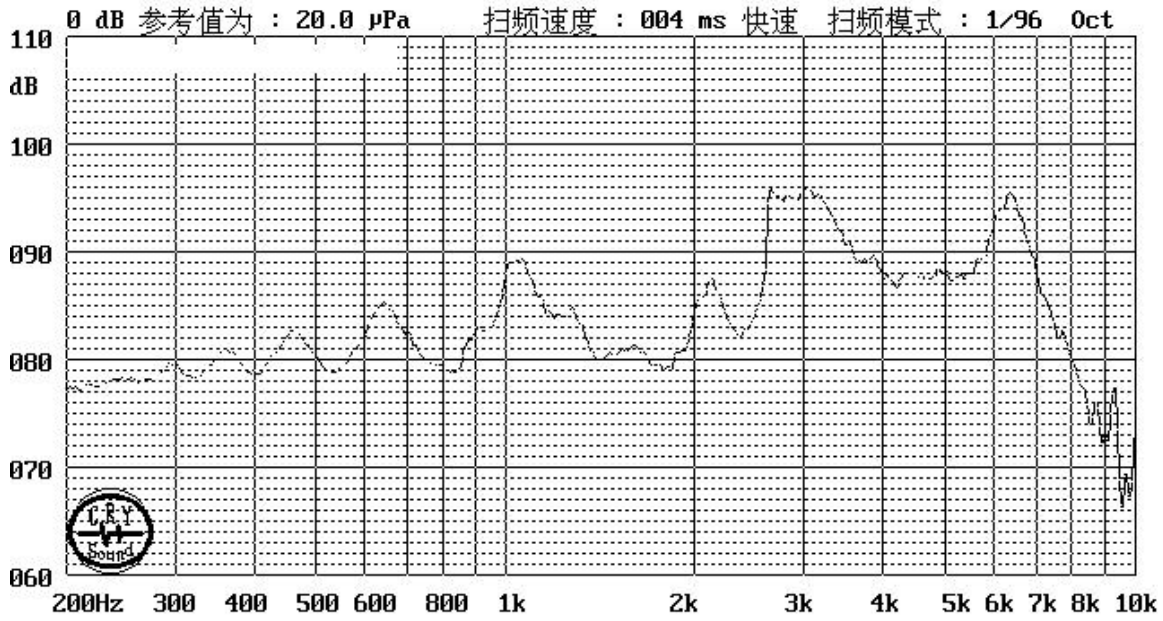

F. Recommend Driving Circuit

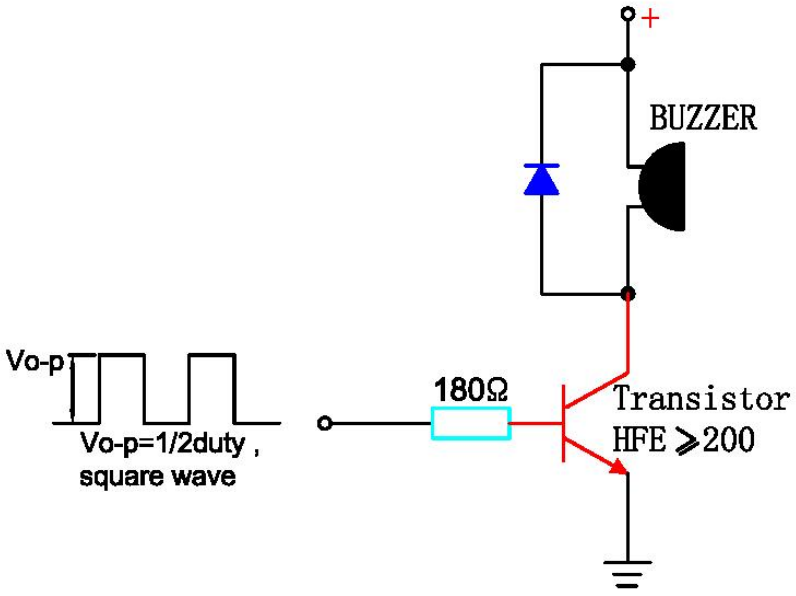

The base current Ib should high enough so that it saturates the collector current of the transistor with the CB load.

深圳市兴华鑫电子科技有限公司

产品规格内容

G. Soldering Condition

(1)Recommendable reflow soldering condition is as follows
(Reflow soldering is twice)

Note:It is requested that reflow soldering should be executed after heat of product goes down to normal.

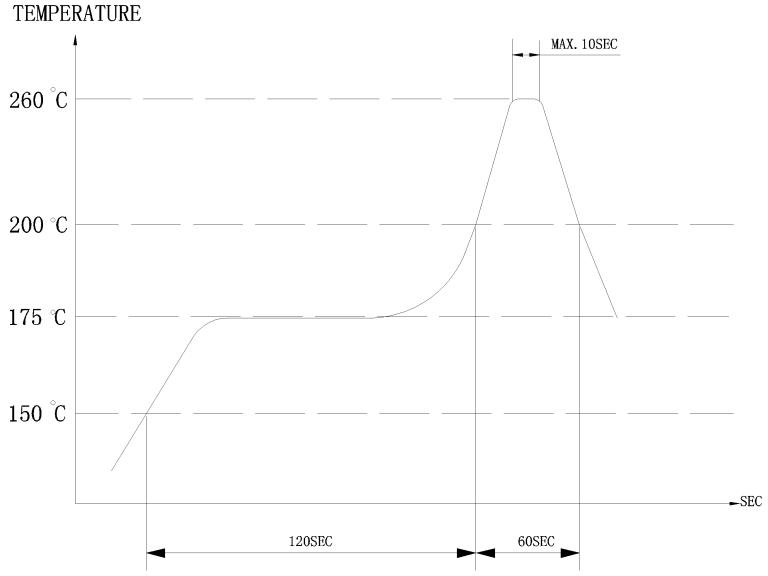

Heat resistant line
(Used when heat resistant reliability test is performed)

(2)Manual soldering
Manual soldering temperature 350º C within 5 sec.

H. Solder pads size (mm)

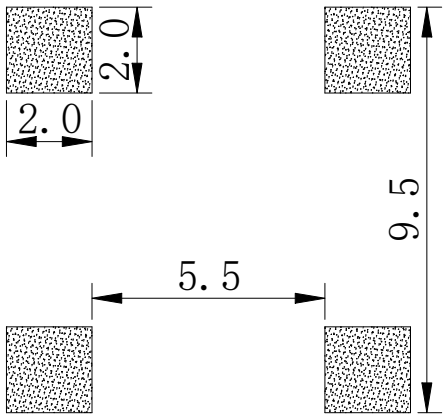

深圳市兴华鑫电子科技有限公司

产品规格内容

I. RELIABILITY TEST

NO.	ITEM	TEST CONDITION AND REQUIREMENT
1	High Temperature Test (Storage)	After being placed in a chamber with 80 2ºC for 96 hours and then being placed in normal condition for 2 hours. Allowable variation of SPL after test: 10dB.
2	Low Temperature Test (Storage)	After being Placed in a chamber with -30 2ºC for 96 hours and then being placed in normal condition for 2 hours. Allowable variation of SPL after test: 10dB.
3	Humidity Test	After being Placed in a chamber with 90-95% R.H. at 40 2ºC for 96 hours and then being placed in normal condition for 2 hours. Allowable variation of SPL after test: 10dB.
4	Temperature Cycle Test	The part shall be subjected to 5 cycles. One cycle shall be consist of： 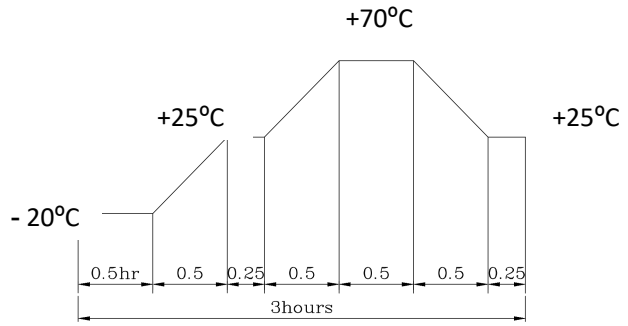 Allowable variation of SPL after test: 10dB.
5	Drop Test	Drop on a hard wood board of 4cm thick, any directions ,6 times, at the height of 75cm . Allowable variation of SPL after test: 10dB.
6	Vibration Test	After being applied vibration of amplitude of 1.5mm with 10 to 55 Hz band of vibration frequency to each of 3 perpendicular directions for 2 hours . Allowable variation of SPL after test: 10dB.
7	Solderability Test	Lead terminals are immersed in rosin for 5 seconds and then immersed in solder bath of +300 5ºC for 3 1 seconds . 90% min. lead terminals shall be wet with solder (Except the edge of terminals).
8	Terminal Strength Pulling Test	The force of 9.8N(1.0kg) is applied to each terminal in axial direction for 10 seconds. No visible damage and cutting off.

TEST CONDITION.

Standard Test Condition: a) Temperature : +5 ~ +35℃ b) Humidity : 45-85% c) Pressure : 860-1060mbar

一般测试条件:a) 温度 ：+5 ~ +35℃ b) 湿度 ：45-85% c) 气压 ：860-1060mbar

Judgment Test Condition:a) Temperature : +25 ± 2℃ b) Humidity : 60-70% c) Pressure : 860-1060mbar

争议时测试条件:a) 温度 ：+25 ± 2℃ b) 湿度 ：60-70% c) 气压 ：860-1060mba

深圳市兴华鑫电子科技有限公司

产品规格内容

J . ACKING STANDARD

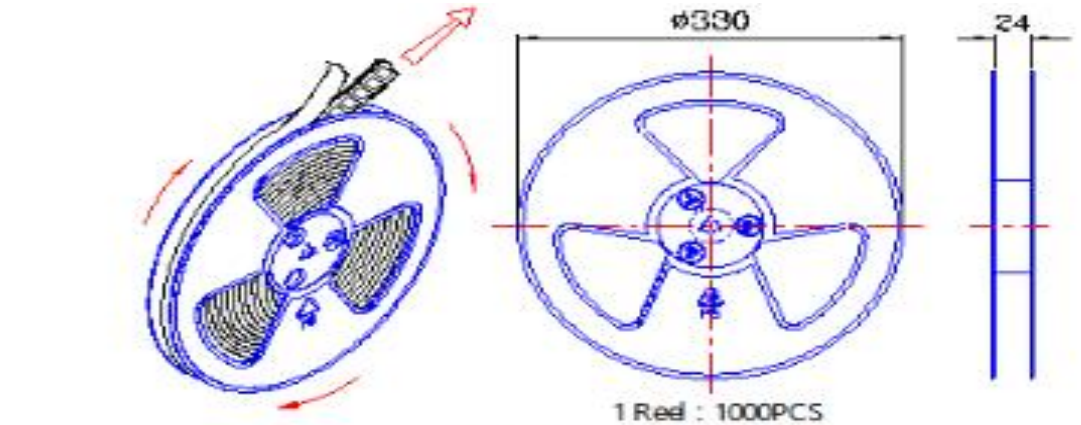

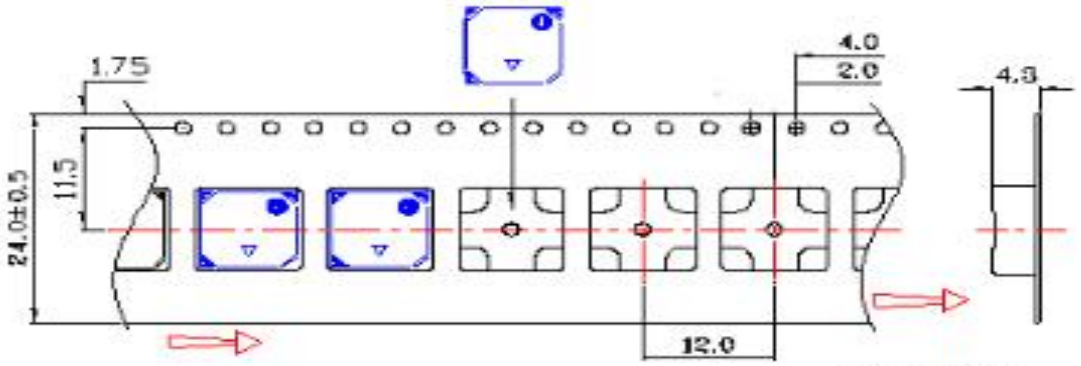

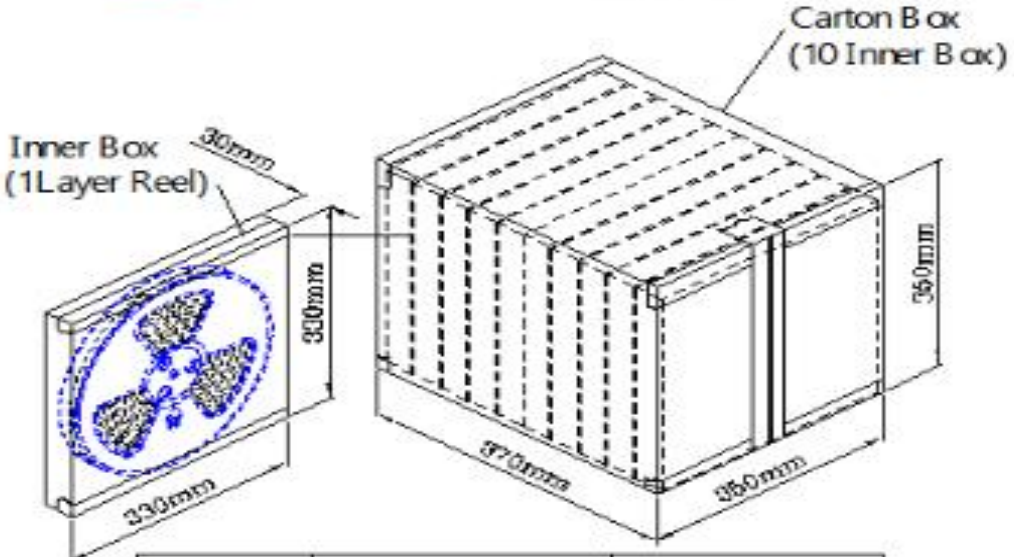

Inner Box	330mmx330mmx30mm	1x1000PCS=1000PCS
Carton Box	350mmx350mmx370mm	10x1000PCS=10,000PCS