DATASHEET

8 PIN DIP HIGH SPEED 10MBit/s LOGIC GATE PHOTOCOUPLER
EL263X series

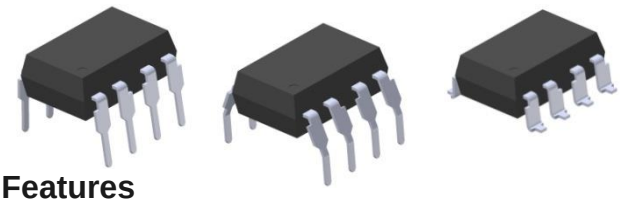

Schematic

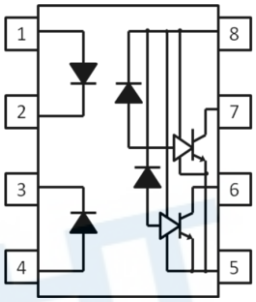

A 0.1μF bypass capacitor must be connected between pins 8 and 5 *3

Pin Configuration
1. Anode
2. Cathode
3. Cathode
4. Anode
5. Gnd
6. $V_{out\ 2}$
7. $V_{out\ 1}$
8. V_{CC}

Features

- High speed 10Mbit/s
- 10kV/μs min. common mode transient immunity (EL2631)
- Guaranteed performance from -40 to 85℃
- Logic gate output
- High isolation voltage between input and output (Viso=5000 Vrms)
- Pb free and RoHS compliant.
- UL and cUL approved(No. E214129)
- VDE approved (No. 132249)
- SEMKO approved
- NEMKO approved
- DEMKO approved
- FIMKO approved

Description

The EL2630 and EL2631 are consists of an infrared emitting diode optically coupled to a high speed integrated photo detector logic gate with a strobable output. It is packaged in a 8-pin DIP package and available in wide-lead spacing and SMD options.

Applications

- Ground loop elimination
- LSTTL to TTL, LSTTL or 5 volt CMOS
- Line receiver, data transmission
- Data multiplexing
- Switching power supplies
- Pulse transformer replacement
- Computer peripheral interface
- High speed logic ground isolation

Truth Table (Positive Logic)

Input	Output
H	L
L	H

Copyright © 2010, Everlight All Rights Reserved. Release Date : May 13, 2013. Issue No: DPC-0000144 Rev.5

Ver.:5 Release Date:07/03/2019 准备:Approved(正式发行)

Absolute Maximum Ratings (T_A=25°C)

Parameter		Symbol	Rating	Unit
Input	Forward current	I_F	20	mA
	Reverse voltage	V_R	5	V
	Power dissipation	P_D	40	mW
Output	Power dissipation	P_C	60	mW
	Output current	I_O	50	mA
	Output voltage	V_O	7.0	V
	Supply voltage	V_{CC}	7.0	V
Output Power Dissipation		P_O	85	mW
Isolation voltage *1		V_{ISO}	5000	Vrms
Operating temperature		T_{OPR}	-40~+100	°C
Storage temperature		T_{STG}	-55~+125	°C
Soldering temperature *2		T_{SOL}	260	°C

Notes:
*1 AC for 1 minute, R.H.= 40 ~ 60% R.H. In this test, pins 1, 2, 3 & 4 are shorted together, and pins 5, 6, 7 & 8 are shorted together.

*2 For 10 seconds.

EVERLIGHT

Copyright © 2010, Everlight All Rights Reserved. Release Date : May 13, 2013. Issue No:DPC-0000144 Rev.5

Electrical Characteristics (T_A =-40 to 85°C unless specified otherwise)

Input

Parameter	Symbol	Min.	Typ.*	Max.	Unit	Condition
Forward voltage	V_F	-	1.4	1.8	V	I_F = 10mA, T_A=25°C
Reverse voltage	V_R	5.0	-	-	V	I_R = 10μA
Temperature coefficient of forward voltage	$\Delta V_F/\Delta T_A$	-	-1.8	-	mV/°C	I_F =10mA
Input capacitance	C_{IN}	-	60	-	pF	V_F=0, f=1MHz

Output

Parameter	Symbol	Min	Typ.*	Max.	Unit	Condition
High level supply current	I_{CCH}	-	12.5	18	mA	I_F=0mA, V_{CC}=5.5V
Low level supply current	I_{CCL}	-	14.5	21	mA	I_F=10mA, V_{CC}=5.5V

Transfer Characteristics (T_A =-40 to 85°C unless specified otherwise)

Parameter	Symbol	Min	Typ.	Max.	Unit	Condition
HIGH Level Output Current	I_{OH}	-	2.1	100	μA	V_{CC}=5.5V, V_O=5.5V, I_F=250μA
LOW Level Output Current	V_{OL}	-	0.35	0.6	V	V_{CC} = 5.5V, I_F=5mA, I_{CL}=13mA
Input Threshold Current	I_{FT}	-	2.5	5	mA	V_{CC}= 5.5V, V_O=0.6V, I_{OL}=13mA

Switching Characteristics (T_A =-40 to 85°C, V_{CC}=5V, I_F=7.5mA unless specified otherwise)

Parameter	Symbol	Min	Typ.	Max.	Unit	Condition
Propagation delay time to output High level*4 (Fig.12)	T_{PLH}	-	35	100	ns	C_L = 15pF, R_L=350Ω, T_A=25°C
Propagation delay time to output Low level*5 (Fig.12)	T_{PHL}	-	40	100	ns	C_L = 15pF, R_L=350Ω, T_A=25°C
Pulse width distortion	$\|T_{PHL}-T_{PLH}\|$	-	5	35	ns	C_L = 15pF, R_L=350Ω
Output rise time*6 (Fig.12)	t_r	-	40	-	ns	C_L = 15pF, R_L=350Ω
Output fall time*7 (Fig.12)	t_f	-	10	-	ns	C_L = 15pF, R_L=350Ω

Copyright © 2010, Everlight All Rights Reserved. Release Date : May 13, 2013. Issue No:DPC-0000144 Rev.5

Switching Characteristics (T_A =-40 to 85°C, V_{CC}=5V, I_F=7.5mA unless specified otherwise)

Parameter		Symbol	Min	Typ.	Max.	Unit	Condition
Common Mode Transient Immunity at Logic High *8	EL2630	CM_H	5,000	-	-	V/µS	I_F = 0mA , V_{CM}=1KV$_{p-p}$, V_{OH}=2.0V, R_L=350Ω, T_A=25°C(Fig.13)
	EL2631		10,000	20,000	-		I_F = 0mA , V_{CM}=1KV$_{p-p}$, V_{OH}=2.0V, R_L=350Ω, T_A=25°C(Fig.13)
Common Mode Transient Immunity at Logic Low *9	EL2630	CM_L	5,000	-	-	V/µS	I_F = 7.5mA, V_{CM}=1KV$_{p-p}$, V_{OL}=0.8V, R_L=350Ω, T_A=25°C(Fig.13)
	EL2631		10,000	20,000	-		I_F = 7.5mA, V_{CM}=1KV$_{p-p}$, V_{OL}=0.8V, R_L=350Ω, T_A=25°C(Fig.13)

EVERLIGHT

Copyright © 2010, Everlight All Rights Reserved. Release Date : May 13, 2013. Issue No:DPC-0000144 Rev.5

Typical Electro-Optical Characteristics Curves

Figure 1. Forward Current vs Forward Voltage

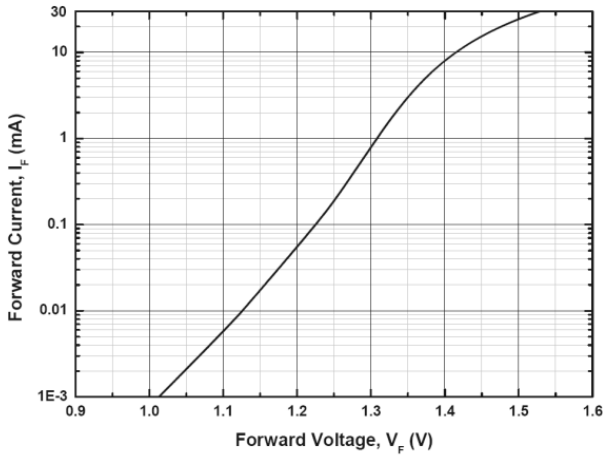

Figure 2. Low Level Output Voltage vs Ambient Temperature

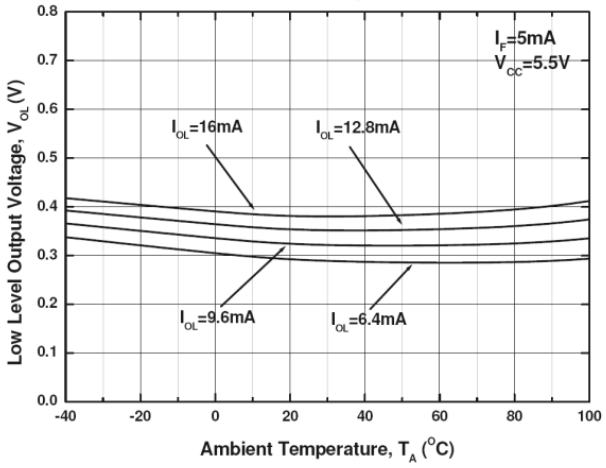

Figure 3. Low Level Output Current vs Ambient Temperature

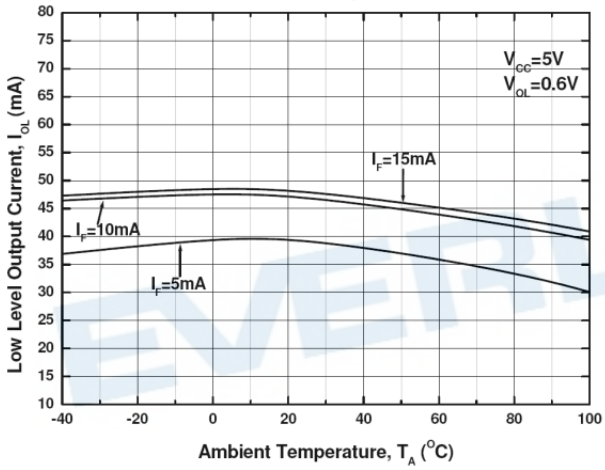

Figure 4. Input Threshold Current vs Ambient Temperature

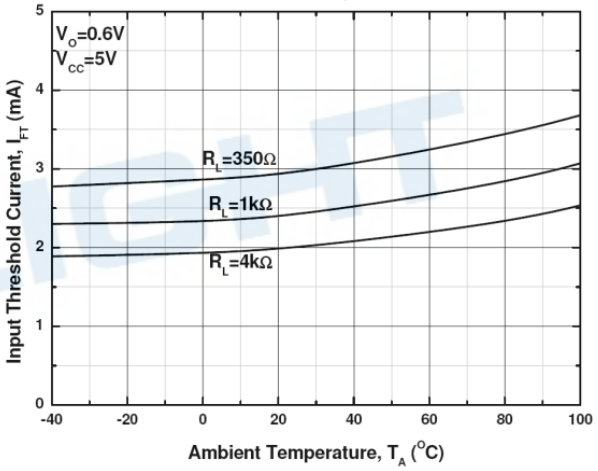

Figure 5. Input Current vs Output Voltage

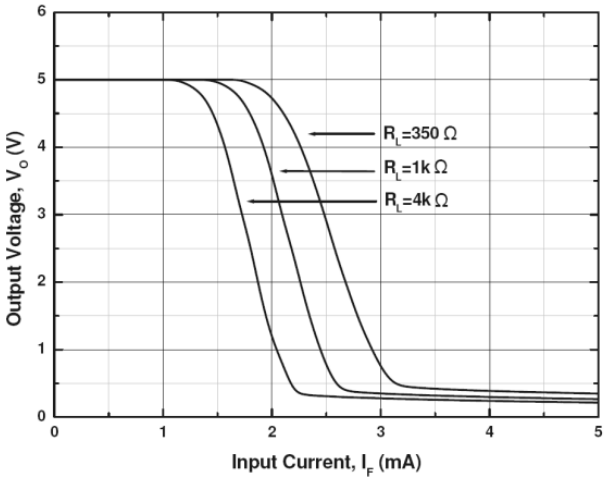

Figure 6. High Level Output Current vs Ambient Temperature

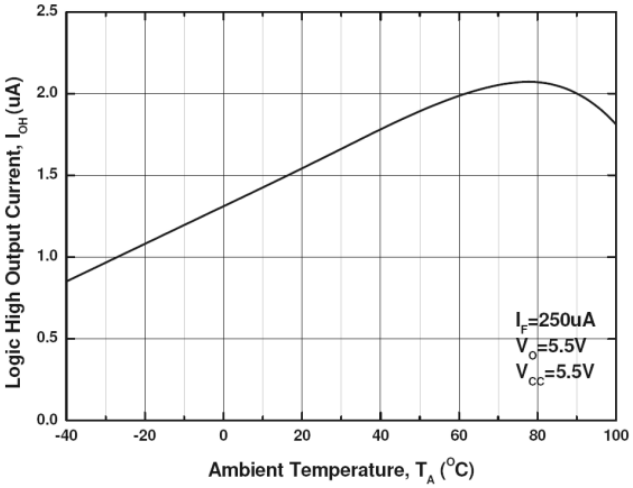

Copyright © 2010, Everlight All Rights Reserved. Release Date : May 13, 2013. Issue No:DPC-0000144 Rev.5

Figure 7. Propagation Delay vs. Forward Current

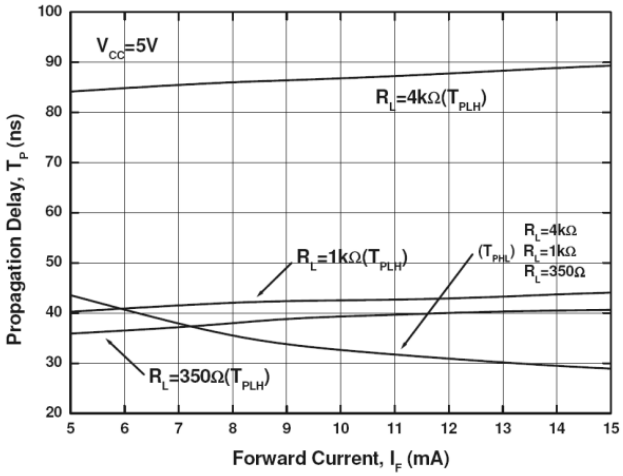

Figure 8. Propagation Delay vs. Temperature

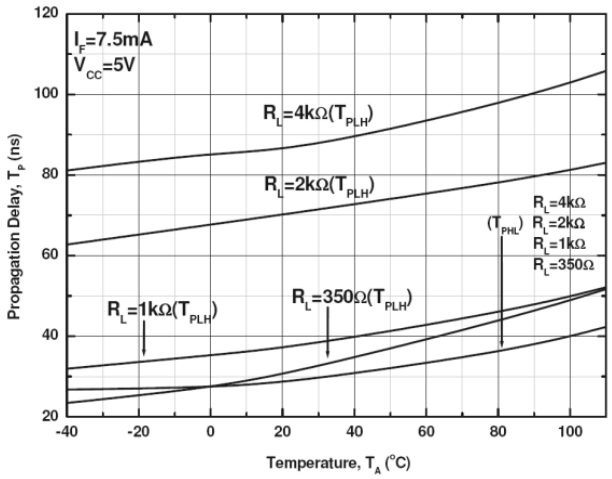

Figure 9. Pulse Width Distortion vs. Temperature

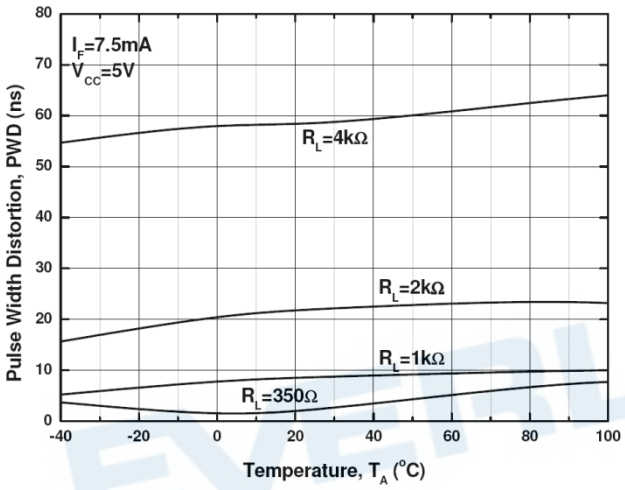

Figure 10. Rise and Fall Time vs. Temperature

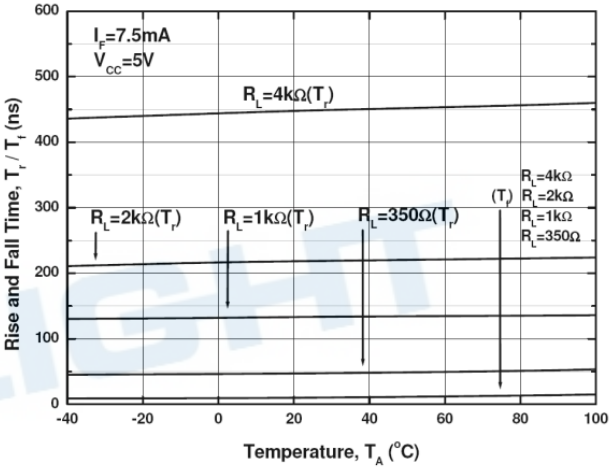

Fig. 11 Test circuit and waveforms for tPHL, tPLH, t_r, and t_f

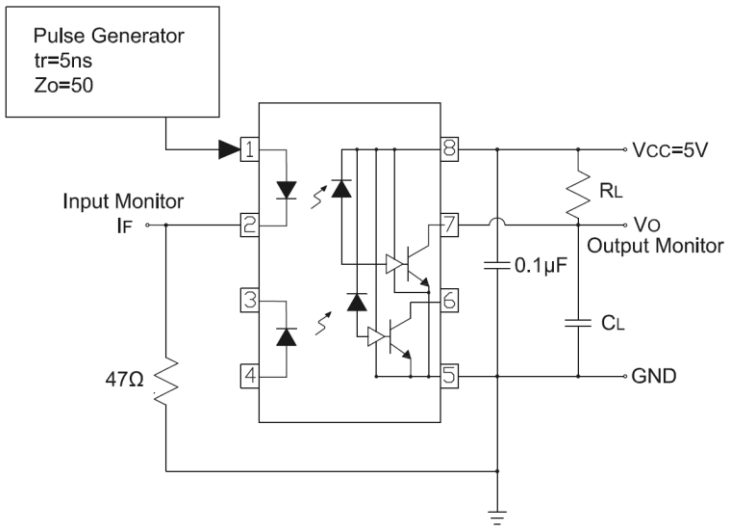

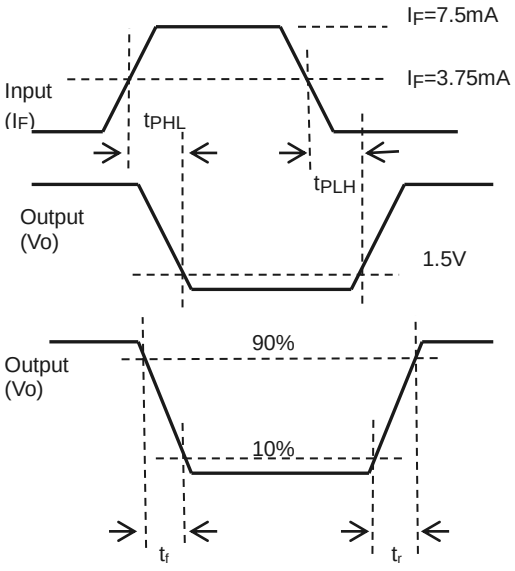

Copyright © 2010, Everlight All Rights Reserved. Release Date : May 13, 2013. Issue No:DPC-0000144 Rev.5

Fig. 12 Test circuit Common mode Transient Immunity

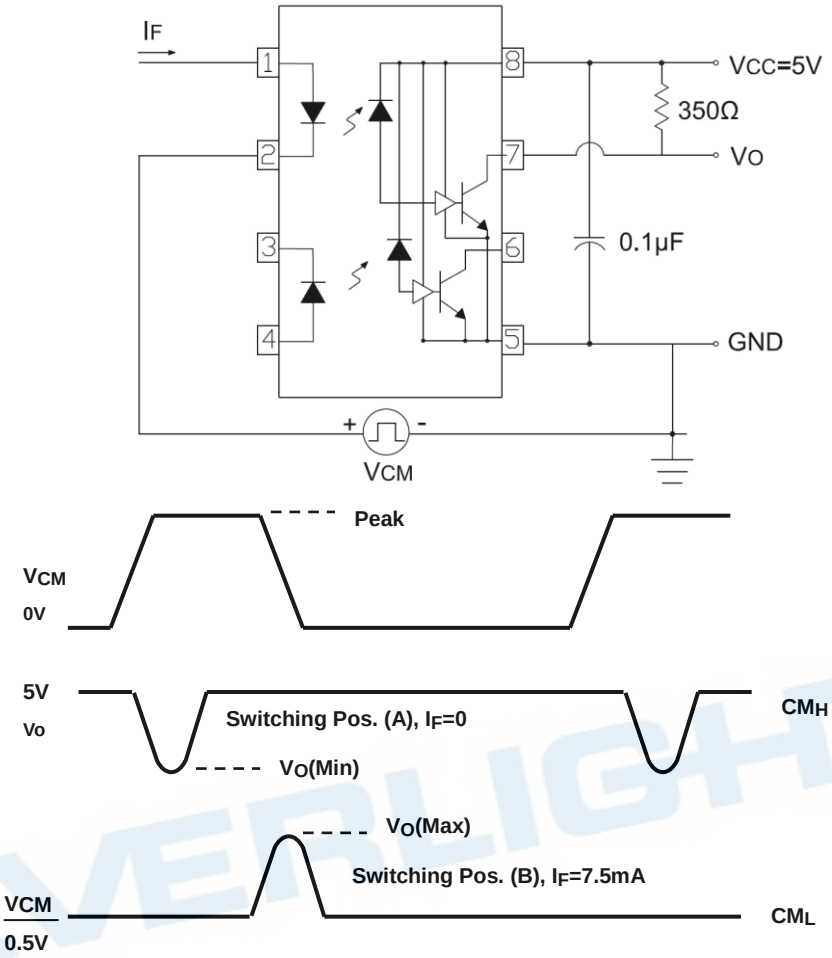

Note

*3 The VCC supply must be bypassed by a 0.1μF capacitor or larger. This can be either a ceramic or solid tantalum capacitor with good high frequency characteristic and should be connected as close as possible to the package VCC and GND pins

*4. tPLH – Propagation delay is measured from the 3.75mA level on the HIGH to LOW transition of the input current pulse to the 1.5 V level on the LOW to HIGH transition of the output voltage pulse.

*5. tPHL – Propagation delay is measured from the 3.75mA level on the LOW to HIGH transition of the input current pulse to the 1.5 V level on the HIGH to LOW transition of the output voltage pulse.

*6. tr – Rise time is measured from the 90% to the 10% levels on the LOW to HIGH transition of the output pulse.

*7. tf – Fall time is measured from the 10% to the 90% levels on the HIGH to LOW transition of the output pulse.

*8 CMH– The maximum tolerable rate of rise of the common mode voltage to ensure the output will remain in the HIGH state (i.e., VOUT > 2.0V).

*9 CML– The maximum tolerable rate of rise of the common mode voltage to ensure the output will remain in the LOW output state (i.e., VOUT < 0.8V).

Copyright © 2010, Everlight All Rights Reserved. Release Date : May 13, 2013. Issue No:DPC-0000144 Rev.5

Order Information

Part Number

EL263XY(Z)-V

Note

X = (0 or 1) for EL26 part no.
Y = Lead form option (S, S1, M or none)
Z = Tape and reel option (TA, TB or none).
V = VDE (optional)

Option	Description	Packing quantity
None	Standard DIP-8	45 units per tube
M	Wide lead bend (0.4 inch spacing)	45 units per tube
S (TA)	Surface mount lead form + TA tape & reel option	1000 units per reel
S (TB)	Surface mount lead form + TB tape & reel option	1000 units per reel
S1 (TA)	Surface mount lead form (low profile) + TA tape & reel option	1000 units per reel
S1 (TB)	Surface mount lead form (low profile) + TB tape & reel option	1000 units per reel

EVERLIGHT

Copyright © 2010, Everlight All Rights Reserved. Release Date : May 13, 2013. Issue No:DPC-0000144 Rev.5

Package Dimension
(Dimensions in mm)

Standard DIP Type

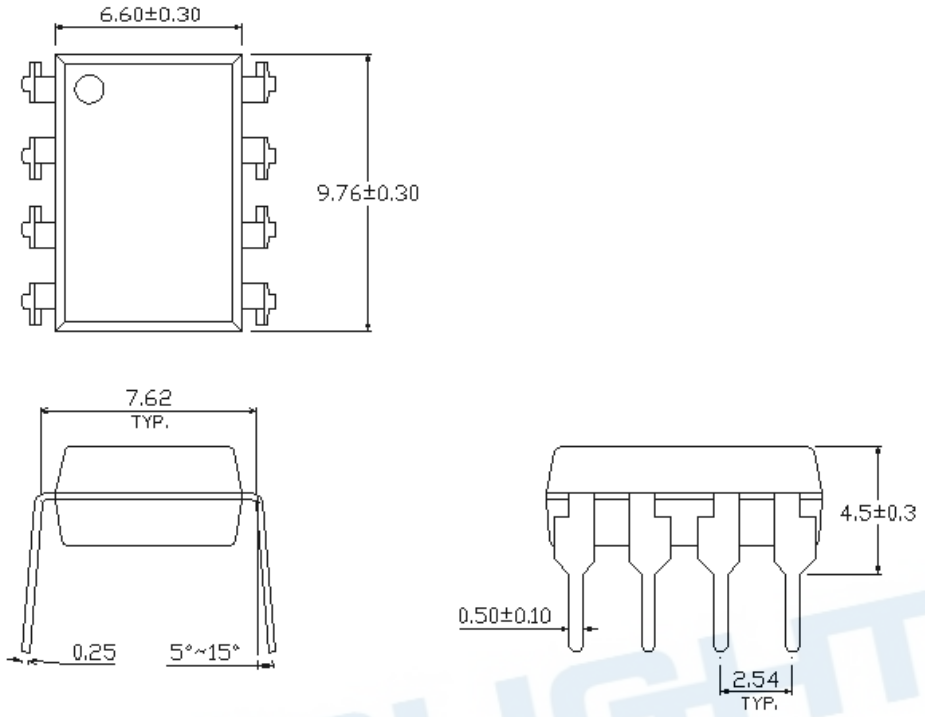

Option M Type

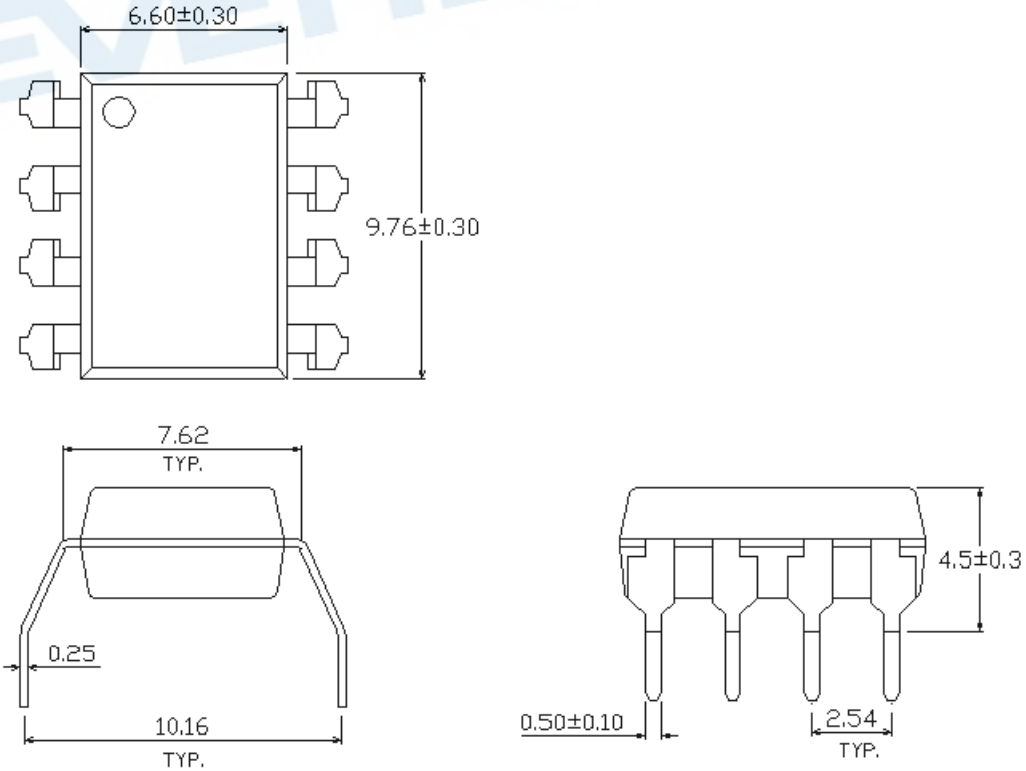

Copyright © 2010, Everlight All Rights Reserved. Release Date : May 13, 2013. Issue No:DPC-0000144 Rev.5

Option S Type

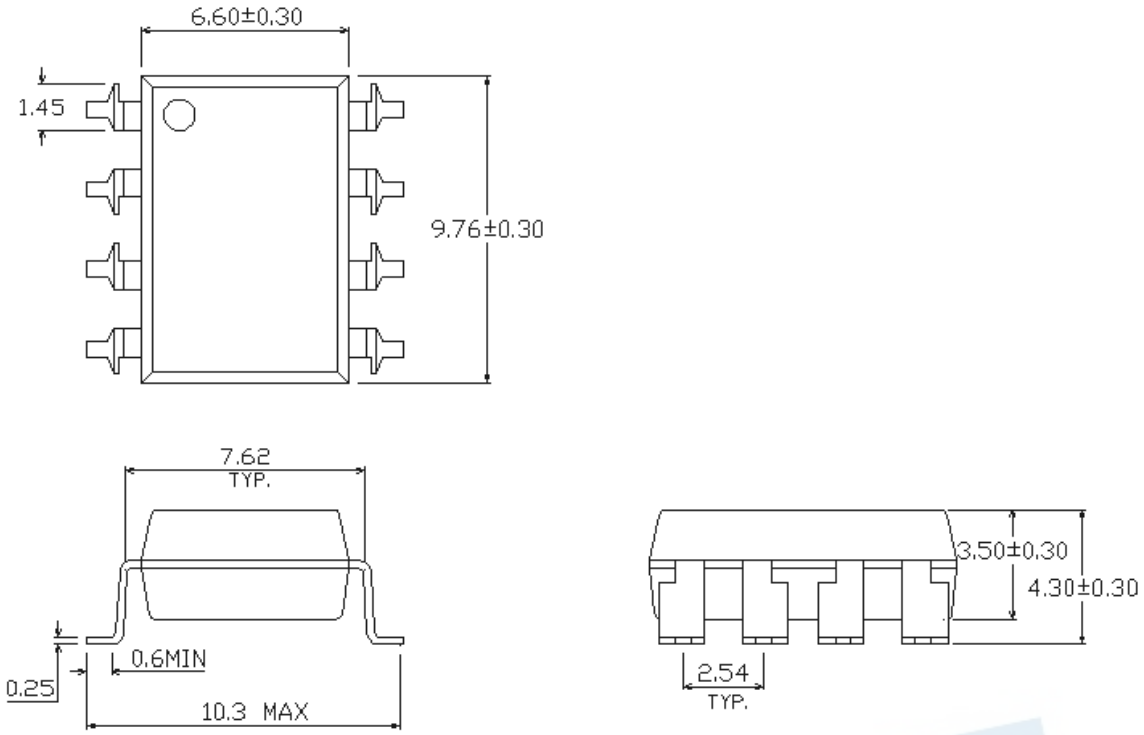

Option S1 Type

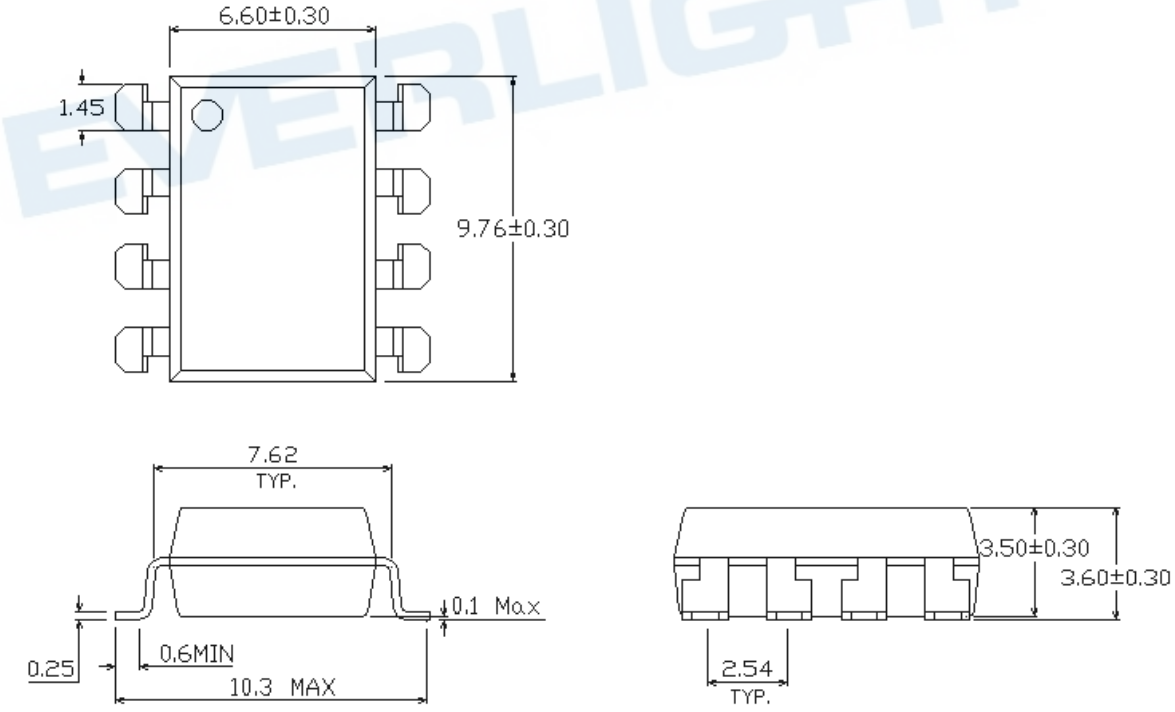

Copyright © 2010, Everlight All Rights Reserved. Release Date : May 13, 2013. Issue No:DPC-0000144 Rev.5

Recommended pad layout for surface mount leadform

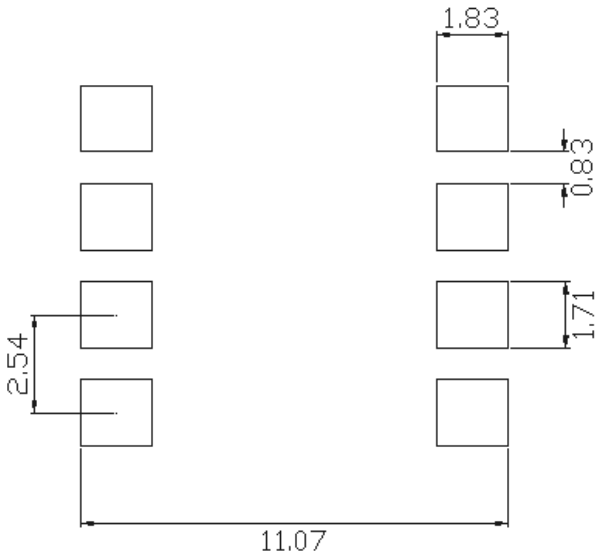

Notes.
Suggested pad dimension is just for reference only.
Please modify the pad dimension based on individual need.

Device Marking

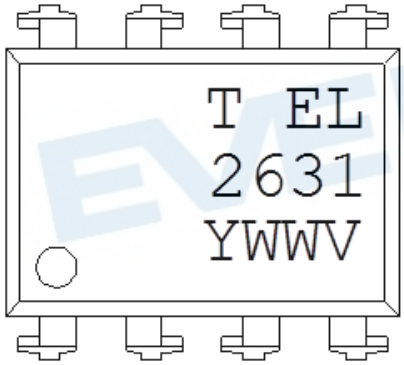

Notes

T	denotes Factory No code : made in China T : made in Taiwan
EL	denotes EVERLIGHT
2631	denotes Device Number
Y	denotes 1 digit Year code
WW	denotes 2 digit Week code
V	denotes VDE (optional)

Copyright © 2010, Everlight All Rights Reserved. Release Date : May 13, 2013. Issue No:DPC-0000144 Rev.5

Tape & Reel Packing Specifications

Option TA

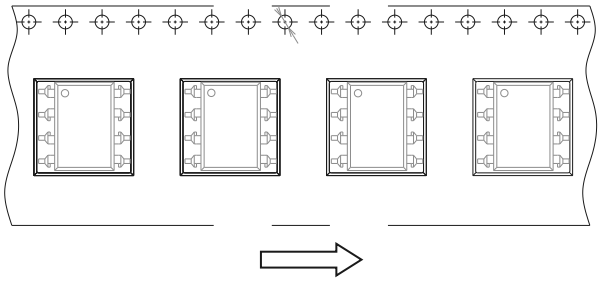

Direction of feed from reel

Option TB

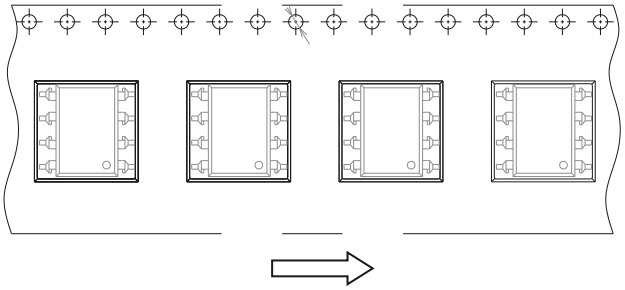

Direction of feed from reel

Tape dimension

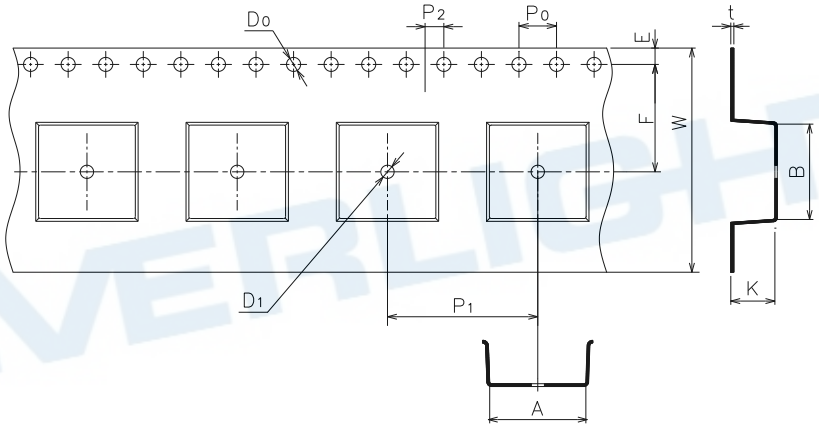

Dimension No.	A	B	Do	D1	E	F
Dimension(mm)	10.4±0.1	10.0±0.1	1.5+0.1/-0	1.5±0.25	1.75±0.1	7.5±0.1
Dimension No.	**Po**	**P1**	**P2**	**t**	**W**	**K**
Dimension(mm)	4.0±0.1	12.0±0.1	2.0±0.05	0.4±0.05	16.0±0.3	4.5±0.1

Copyright © 2010, Everlight All Rights Reserved. Release Date : May 13, 2013. Issue No:DPC-0000144 Rev.5

Precautions for Use

1. Soldering Condition

1.1 (A) Maximum Body Case Temperature Profile for evaluation of Reflow Profile

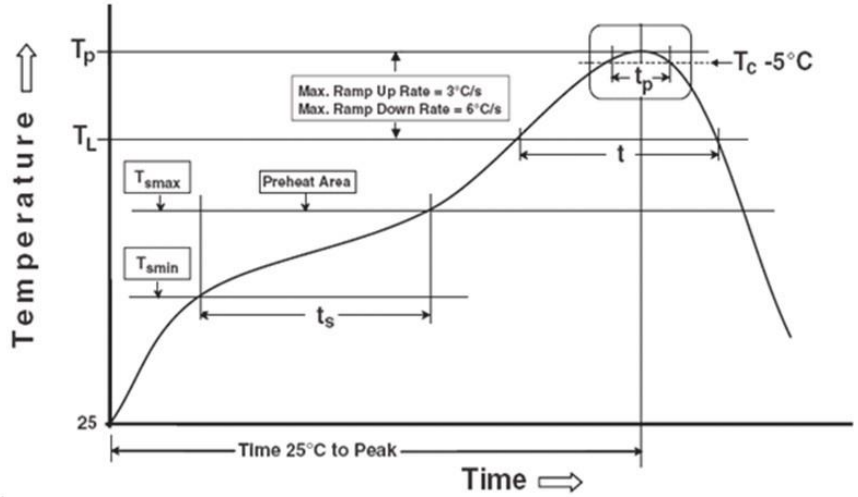

Note: Reference: IPC/JEDEC J-STD-020D

Preheat	
Temperature min (T_{smin})	150°C
Temperature max (T_{smax})	200°C
Time (T_{smin} to T_{smax}) (t_s)	60-120 seconds
Average ramp-up rate (T_{smax} to T_p)	3°C/second max
Other	
Liquidus Temperature (T_L)	217°C
Time above Liquidus Temperature (t_L)	60-100 sec
Peak Temperature (T_P)	260°C
Time within 5 °C of Actual Peak Temperature: T_P - 5°C	30 s
Ramp- Down Rate from Peak Temperature	6°C /second max.
Time 25°C to peak temperature	8 minutes max.
Reflow times	3 times

Copyright © 2010, Everlight All Rights Reserved. Release Date : May 13, 2013. Issue No:DPC-0000144 Rev.5

DISCLAIMER

1. Above specification may be changed without notice. EVERLIGHT will reserve authority on material change for above specification.
2. The graphs shown in this datasheet are representing typical data only and do not show guaranteed values.
3. When using this product, please observe the absolute maximum ratings and the instructions for use outlined in these specification sheets. EVERLIGHT assumes no responsibility for any damage resulting from use of the product which does not comply with the absolute maximum ratings and the instructions included in these specification sheets.
4. These specification sheets include materials protected under copyright of EVERLIGHT. Reproduction in any form is prohibited without the specific consent of EVERLIGHT.
5. This product is not intended to be used for military, aircraft, automotive, medical, life sustaining or life saving applications or any other application which can result in human injury or death. Please contact authorized Everlight sales agent for special application request.
6. Statements regarding the suitability of products for certain types of applications are based on Everlight's knowledge of typical requirements that are often placed on Everlight products in generic applications. Such statements are not binding statements about the suitability of products for a particular application. It is the customer's responsibility to validate that a particular product with the properties described in the product specification is suitable for use in a particular application. Parameters provided in datasheets and/or specifications may vary in different applications and performance may vary over time. All operating parameters, including typical parameters, must be validated for each customer application by the customer's technical experts. Product specifications do not expand or otherwise modify Everlight's terms and conditions of purchase, including but not limited to the warranty expressed therein.

Copyright © 2010, Everlight All Rights Reserved. Release Date : May 13, 2013. Issue No:DPC-0000144 Rev.5